ricoma®
THINK BEYOND

Home Sewing and Embroidery Machine

Instruction Manual

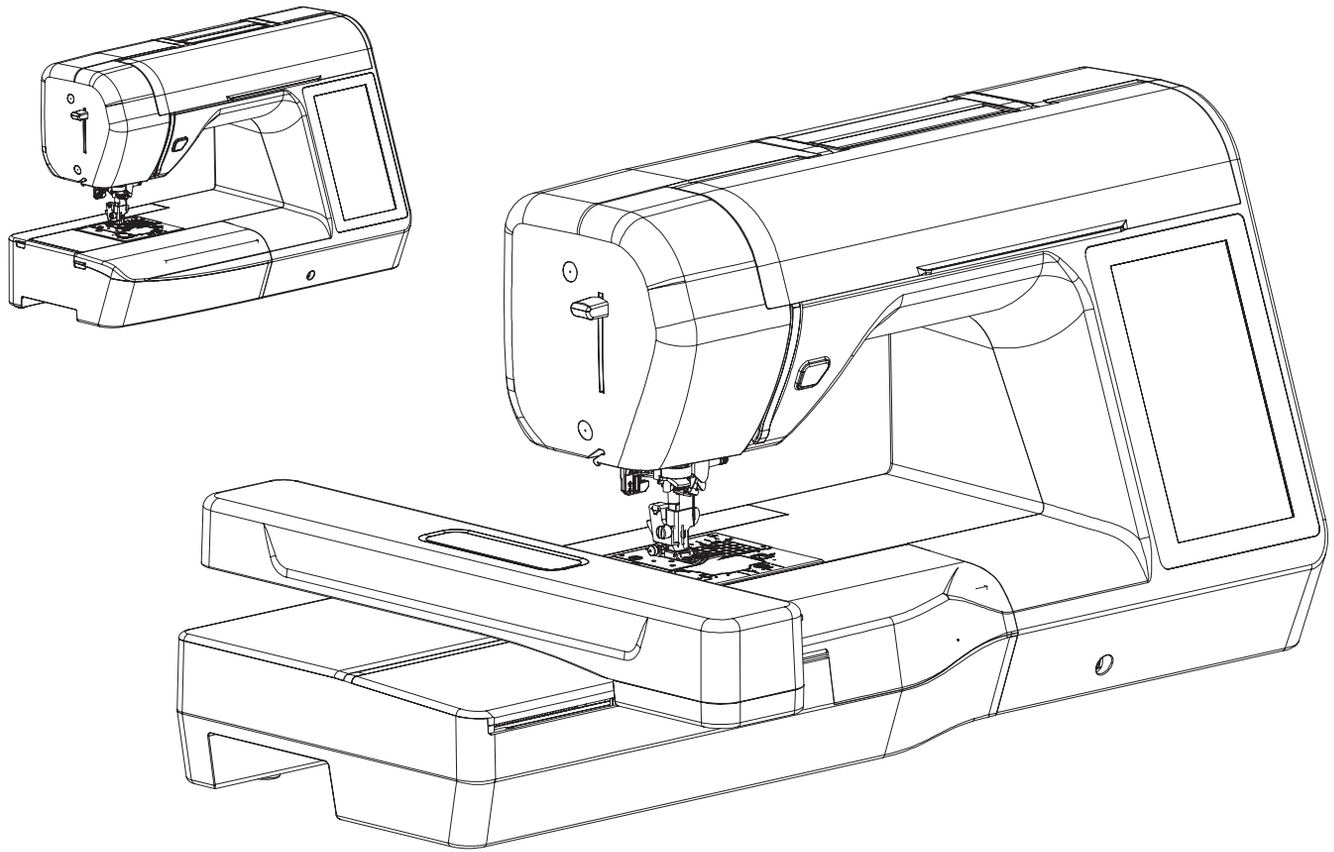

To create a better environment

First of all, I would like to express my sincere gratitude for your use of Ricoma products!

Ricoma is committed to caring for the Earth's environment and has established a basic policy of "caring for the Earth's environment from product development to disposal." Local citizens should also do their part in environmental protection activities, contributing to both the local community and the environment.

Therefore, we hope you can cooperate with this plan and, as part of environmental protection activities, pay more attention to waste disposal in your daily life:

1. Unused packaging materials should be handed over to a local recycling company for processing so that they can be recycled again.

2. When product maintenance or repair requires replacement of parts, or when the product is discarded, please handle it in accordance with laws and regulations.

3. After turning off the power switch of this product and unplugging the power cord, the power consumption is zero.

4. Some components in Ricoma products can be used in the same series of models manufactured in the same factory.

Tips: For parts replacement, please contact Ricoma or its authorized distributor for consultation and repair.

Overview

Thank you for purchasing this machine. Before using this embroidery machine, please carefully read the "Safety Instructions" and then read this instruction manual to ensure proper operation of all functions.

Safety PreCautions

Please read these safety instructions before using the machine.

Danger

· To reduce the risk of electric shock

· When you finish using the machine, clean the machine, perform any user maintenance or adjustment operations mentioned in this manual, or leave the machine unattended, be sure to unplug the machine from the power outlet.

warn

To reduce the risk of burns, fire, electric shock or personal injury.

1. Before making any adjustments as described in this manual, be sure to unplug the machine from the power outlet.

· To unplug the machine, first turn the main switch to the "O" position to turn off the machine, then grasp the power plug and pull it out of the power outlet. Do not pull on the power cord.

· Please ensure the power plug is inserted directly into the power outlet. Do not use an extension cord to connect to the power source.

· In case of power failure, be sure to unplug the machine.

2. Electrical Hazards:

· This unit should be connected to an AC power source within the range indicated on the nameplate. Do not connect to a DC power source or inverter. If you are unsure of your power supply type, please contact a qualified electrical technician.

· This device is for use only in the country of purchase.

3. Do not continue to use the machine if the power cord or plug is damaged, the machine is not working properly, it has been dropped or damaged, or water has splashed onto the machine. Please send the machine to Ricoma or its authorized dealer for professional inspection or electrical or mechanical adjustments.

·If you notice any abnormalities when storing or using the machine, such as odor, heat, discoloration, or deformation, stop using the machine immediately and unplug the power cord.

· When transporting this machine, always use the handle. Lifting the machine from other locations may damage it or cause it to fall, potentially resulting in personal injury.

· When lifting the machine, be careful not to make any careless movements, as this may lead to personal injury.

4. Please keep the work area clean.

· Do not block any ventilation openings while operating the machine. Ensure that no lint, dust, or scraps of cloth accumulate in the machine's ventilation openings and foot pedal control.

· Do not store any items on the foot pedal controller.

· Do not use an extension cord to plug in the power. Always plug the power cord directly into a power outlet.

· Do not allow any foreign objects to fall into the machine opening or insert them into any opening.

· Do not use this machine in areas where sprays are used or oxygen is stored.

· Do not use the machine near heat sources such as stoves or irons; otherwise, the machine, power cord, or sewn clothing may ignite, causing a fire or electric shock.

· Do not place the device on an uneven, unstable, or inclined surface to prevent the risk of falling and potential personal injury.

Warn

5. Special attention should be paid to the following when sewing:

· Please be very careful with the needle. Do not use bent or damaged needles.

· Do not touch any moving parts with your fingers. Be especially careful near the needle.

· When making any adjustments to the needle position, please switch the embroidery machine to the "O" position to turn it off.

· Do not use damaged or incorrect needle plates, as this may cause the needles to break.

· Do not pull on the fabric while sewing, and please follow the instructions carefully when sewing freely to avoid the needle from becoming crooked or breaking.

6. Do not use this device as a toy:

· Please supervise children carefully when using this device or when there are children nearby while using this device.

· Keep children away from the plastic bags provided with this machine and do not discard them carelessly. Do not allow children to play with the plastic bags, as this poses a choking hazard.

· Do not use outdoors.

7. PreCautions for extending service life:

· When storing the machine, please avoid direct sunlight or high humidity. Do not use or store the machine near indoor heaters, irons, halogen lamps, or other high-temperature objects.

· Use only neutral soap or detergent when cleaning the casing. Benzene, thinner, and detergent powder may damage the machine; do not use them.

· When replacing or installing any components, pressure feet, pins or other parts, please refer to this instruction manual to ensure correct installation.

8. PreCautions for repair or adjustment:

· If the light fixture is damaged, it must be replaced by Ricoma or its authorized distributor.

· If this machine malfunctions or requires adjustment, please first refer to the troubleshooting table at the end of the instruction manual to check and adjust it yourself. If you are unable to resolve the problem yourself, please consult the sales agent or technical service center where you purchased the machine.

This machine may only be used for the purposes specified in this instruction manual.

Only use the accessories recommended by the manufacturer in this instruction manual.

The contents of this instruction manual and the specifications of this product are subject to change without notice.

This device is not suitable for use by persons with disabilities, impaired senses, intellectual disabilities, or insufficient experience and knowledge (including children) unless supervised or instructed by a person responsible for their safety. Young children should be properly supervised and prevented from playing with this device.

Children aged 8 and above (including 8 years old), as well as persons with disabilities, impaired senses, intellectual disabilities, or insufficient experience and knowledge, may use this equipment if supervised or instructed on its safe use and understanding of the associated dangers. Children must not play with the equipment. Children must not perform cleaning or user maintenance work without supervision.

Important Information

If the available power outlet is not compatible with the power cord plug provided with this device, please contact Ricoma or your authorized distributor for the correct cord.

Contents

Basic Operations 13

Chapter 1 Names and Functions of Embroidery Machine Parts 13

Needle and Presser Foot Section 14

Embroidery Unit 15

Operation Panel and Operation Keys 16

Using the Extension Table / Additional Work Table 16

Accessory List 17

Using the Utility Stitch Table Described in the "Sewing" Section 18

Chapter 2 Turning the Sewing Machine On / Off 18

Turning On the Sewing Machine 19

Turning Off the Machine 20

Selecting Machine Settings for the First Time 20

Chapter 3 LCD Operation 21

Viewing the LCD 21

Using the Settings Key 25

Selecting the Display Language 29

Chapter 4 Bobbin Winding / Installation 30

Winding the Bobbin 30

Installing the Bobbin 34

Chapter 5 Upper Threading 36

Upper Threading 37

Threading 39

Manual Threading (Without Using the Threader) 41

Pulling Up the Bobbin Thread 42

Using Twin Needles 43

Chapter 6 Replacing the Needle 45

Fabric / Thread / Needle Combination 46

Checking Needle Condition 47

Replacing the Needle 48

Chapter 7 Presser Foot 49

Changing the Presser Foot 49

Removing the Presser Foot Holder 50

Installing the Presser Foot Holder 51

Chapter 8 Starting to Sew 51

Stitch Types 51
Sewing Stitches 52
Using the Foot Controller 55
Sewing Reinforcement Stitches 56
Automatic Reinforcement Stitch 56
Setting Stitches 60
Setting the Stitch Width 60
Setting the Stitch Length 61
Setting "L / R Shift (Left / Right Shift) 61
Setting the Upper Thread Tension 62
Automatic Thread Cutting 63
Mirroring Stitches 64
Adjusting Presser Foot Pressure 64
Automatic Fabric Sensor (Automatic Presser Foot Pressure Adjustment) 65
Pivot Function 65
Sewing in Free Motion Mode 67
Raising the Presser Foot Hands-Free 68
Stitch Setting Chart 69

Chapter 9 Start Embroidery 83

Embroidery Steps....83
Install the Embroidery Presser Foot....84
Install the Embroidery Unit....85
Removing the Embroidery Unit....88
Achieving Beautiful Embroidery Results....88
Preparing the Fabric....89
Place Iron-on Stabilizer (Backing) on the Fabric....89
Hooping the Fabric in the Embroidery Frame....90
· Types of Embroidery Hoops....90
· Insert the Fabric....91
· Using the Embroidery Positioning Sheet....92
Embroidering Small Fabric Pieces or Fabric Edges....92
· Embroidering Small Fabric Pieces....92
· Embroidering Edges or Corners....93
· Embroidering Ribbon or Tape....93
Installing the Embroidery Hoop....93
Removing the Embroidery Hoop....94
Selecting an Embroidery Pattern....94
· Copyright Information....94
· Types of Embroidery Designs....95
· Selecting an Embroidery Pattern....95

Confirming the Design Position....96
· Checking the Design Position....96
Embroidering a Design....97
Changing Thread Color Display....98
Embroidery Thread Type Settings....99

Sewing....100

Chapter 1 Sewing Techniques....100

Test Sewing....100
Change Sewing Direction....100
Sewing Curves....101
Sewing Tubular Fabric....101
Sew Even Seams....101

Chapter 2 Sewing Various Fabrics....102

Sewing Thick Fabric....102
Sewing Thin Fabric....103
Sewing Stretch Fabric....104
Sewing Hook and Loop Straps....104

Chapter 3 Practical Stitches....104

Basting 105
Basic sewing 105
· Change the Position of the Needle 106
Chapter 4 Blind stitches 107
· If the Needle Catches too Many Folds 109
· If the Needle Does not Catch the Fold 110
Chapter 5 Overedge Stitch 110
Use the Overedge Foot "G" 110
Use the Curved Presser Foot "J" to Sew the Overedge Stitch. 112
Chapter 6 Buttonhole Stitches / Button Sewing 113
Buttonhole Sewing 113
· Adjust the Stitch Length by Changing the Stitch Density 117
· Change Stitch Width 117
· Sewing Buttonholes into Stretch Fabric 117
Button Sewing 118
· Button Mounting Handle 120
Chapter 7 Install the zipper 120
Install Center Zipper 120

Install Side Zipper 122

Chapter 8 Sewing Stretch Fabric and Elastic Bands 125

Extendable Stitch 125

Install Elastic Band 126

Chapter 9 Joining and Quilting Stitches 127

Patchwork (Irregular Quilting) Stitches 127

Splicing 127

· For the Seam Edge on the Right Side 128

· For the Seam Edge on the Left Side 128

Satin Stitch Using a Sewing Speed Controller 128

Chapter 10 Reinforce the Stitches 130

Triple Stretch Stitch 130

Bark Stitch 130

Darning 132

Chapter 11 Chrysanthemum-Shaped Needle Marks 134

Chapter 12 Decorative Stitches 135

Fancy Stitches 136

The Fan Stitch 136
Clothing Pleat Decoration 137
Seashell Edge Stitches 138
Splicing 139
Hereditary Needle Marks 140

Embroidery 142

Chapter 1 Select Design 142

Select Design 142
Selecting Letter Patterns 143
· Letter Embroidery: Text Editing 143
· Letter Embroidery: Font 144
· Letter Embroidery: Settings 145
· Lettering Embroidery: Layout 145
· Letter Embroidery: Spacing 146
· Lettering Embroidery: Resizing 146

Chapter 2 Design Settings 147

Moving the Pattern 147
Editing the Pattern 147
· Design Settings: Size 147

· Design Settings: Rotate 148
· Design Settings: Mirror 149
· Design Settings: Translation 149
· Design Settings: Design Layer Selection 150
· Design Settings: Copy 150
Changing Thread Colors 151

Chapter 3 Combining Patterns 152

Editing a Combined Pattern 152

Chapter 4 Editing All Patterns 154

Embroidery Settings Screen 154
Moving the Pattern 155
Precise Pattern Positioning 155
Embroidering Connected Characters 156

Chapter 5 Adjustments During the Embroidery Process. 158

If the Bobbin Thread Runs Out 158
If the Thread Breaks During Embroidery 158
Starting Again from the Starting Point 159
Continue Embroidery After Power Off 160

Chapter 6 Adjusting the Embroidery Pattern..... 161

Adjusting Thread Tension.....161

· Correct Thread Tension 161

· Top Thread too Tight 161

· Top Thread too Loose 162

Adjusting Embroidery Speed.....163

Presser Foot Height Adjustment 164

Change the Background Color of the Embroidery Pattern 165

Chapter 7 Use the Storage Function 166

Saving / Moving a Pattern to a USB Flash Drive..... 166

Save / Move Patterns from USB Flash Drive to Machine Memory 167

To Delete Patterns from the Machine's Memory..... 169

· Selecting a Pattern from a USB Flash Drive 170

Wireless Pattern Transfer 170

Appendix..... 171

Chapter 1 Maintenance and Servicing 171

Lubrication Restrictions.....171

Machine Storage PreCautions.....171

Cleaning the LCD Screen 171
Cleaning the Machine Surface 171
Cleaning the Rotary Hook 171

Chapter 2 Troubleshooting 173

Common Troubleshooting 174
Upper Thread too Tight 174
· Symptoms 174
· Cause 174
· Solution / Check Details 174
Bobbin Thread Visible on Fabric Underside 175
· Symptoms 175
· Cause 175
· Solution / Check Details 176
Incorrect Thread Tension 177
· Symptoms 177
· Cause / Solution / Check Details 177
Fabric Caught in Machine and Cannot be Removed 178
· Removing Fabric from the Machine 178
· Checking Machine Operation 181
Thread Tangling Under Bobbin Winder Base 182

Symptom List 184
· Preparation 184
· During Sewing 186
· After sewing 192

Chapter 3 Specifications 193

Sewing Machine 193
Embroidery Unit 193
Upgrade Machine Software Using a USB Flash Drive 194

Basic Operations

Chapter 1 Names and Functions of Embroidery Machine Parts

The names and functions of the various parts of the embroidery machine are described below. Before using the embroidery machine, please read these instructions carefully to understand the names and locations of the various parts of the embroidery machine.

Front View

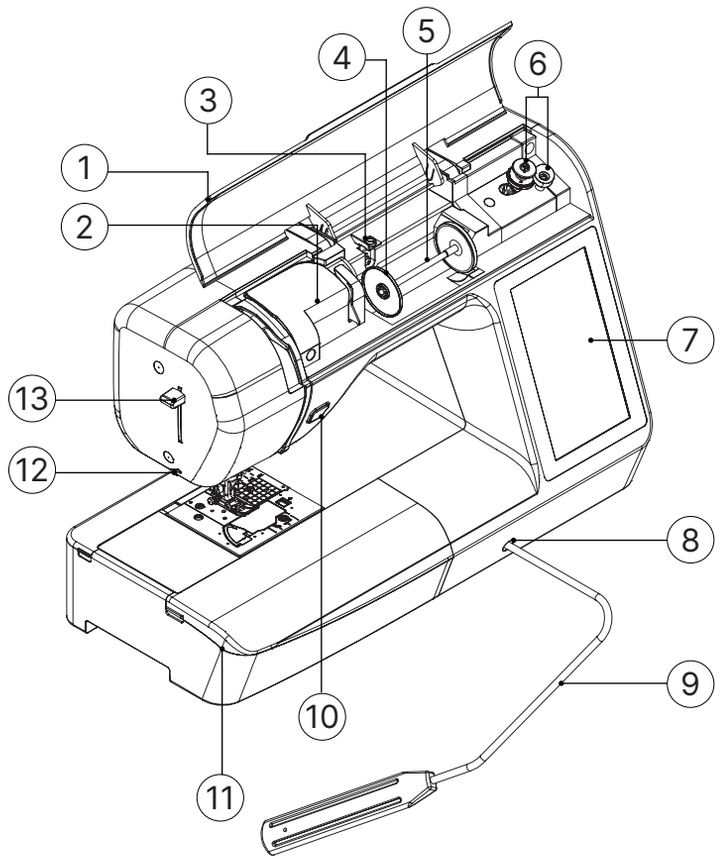

1. Top Cover

Open the top cover to place the thread spool on the spool pin.

2. Thread Guide Plate

When threading the upper thread, pass the thread through the thread guide plate.

3. Bobbin Winding Thread Guide and Pre-tension Disc

When winding the bobbin thread, pass the thread through this thread guide and pre-tension disc.

4. Spool Cap

Use the spool cap to hold the thread spool in place.

5. Spool Pin

Place the thread spool on the spool pin.

6. Bobbin Winder

Use the bobbin winder when winding the bobbin.

7. LCD Display and Touch Screen

The LCD shows settings for the selected stitch and error messages. From the operation panel, you can select and edit stitch settings, and can select operations for using the sewing machine.

8. Presser Foot Lifter Mounting Slot

Insert the presser foot lifter into the presser foot lifter mounting slot.

9. Presser Foot Lifter

Use the presser foot lifter to raise and lower the presser foot.

10. Start / Stop Button

Use this button to control starting and stopping the machine.

11. Additional Work Table / Extension Table (Free Arm)

Insert the presser foot accessory tray into the accessory box of the additional work table. When sewing tubular pieces of fabric like cuffs, remove the additional work table.

12. Thread Cutter

Pass the thread through the thread cutter to cut it.

13. Needle Threader Lever

Use the needle threader lever to thread the needle.

Right View / Rear View

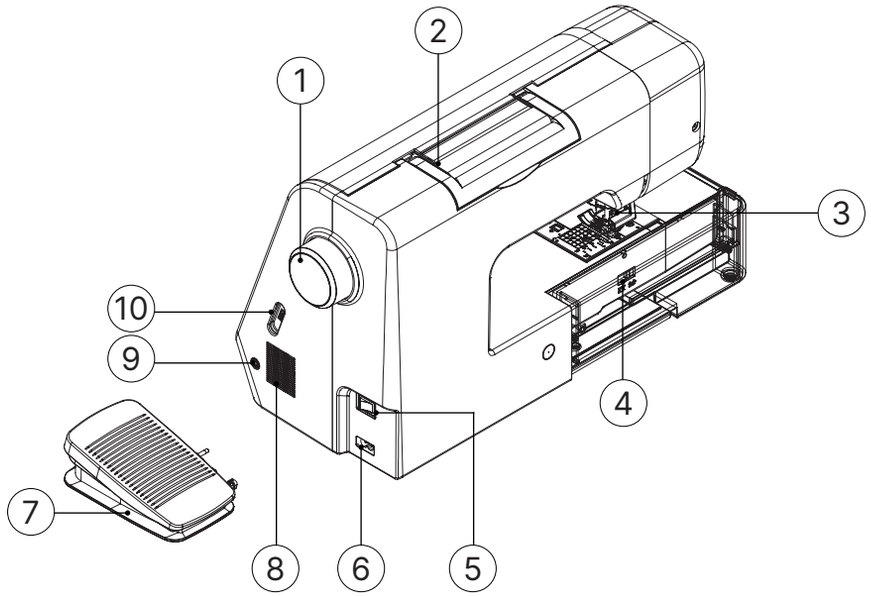

1. Handwheel

Turn the handwheel toward you (counterclockwise) to raise and lower the needle bar to form stitches.

2. Handle

Hold the handle of the embroidery machine to carry it.

3. Presser Foot Lever

Raise and lower the presser foot using the presser foot lever.

4. Feed Dog Position Switch

Use the feed dog position switch to raise or lower the feed dogs.

5. Main Power Switch

Use the main power switch to turn the embroidery machine on or off.

6. Power Cord Socket / Power Inlet

Insert the plug on the power cord into the power inlet.

7. Foot Controller

Depress the foot controller to control the sewing speed.

8. Ventilation Slots

These ventilation slots allow the air around the motor to circulate. Do not cover the ventilation slots while the embroidery machine is running.

9. Foot Controller Jack

Insert the plug on the end of the foot controller cable into the foot controller jack.

10. USB Port (for USB Flash Drive)

To import patterns from a USB flash drive, insert the USB flash drive directly into the USB port.

Needle and Presser Foot Section

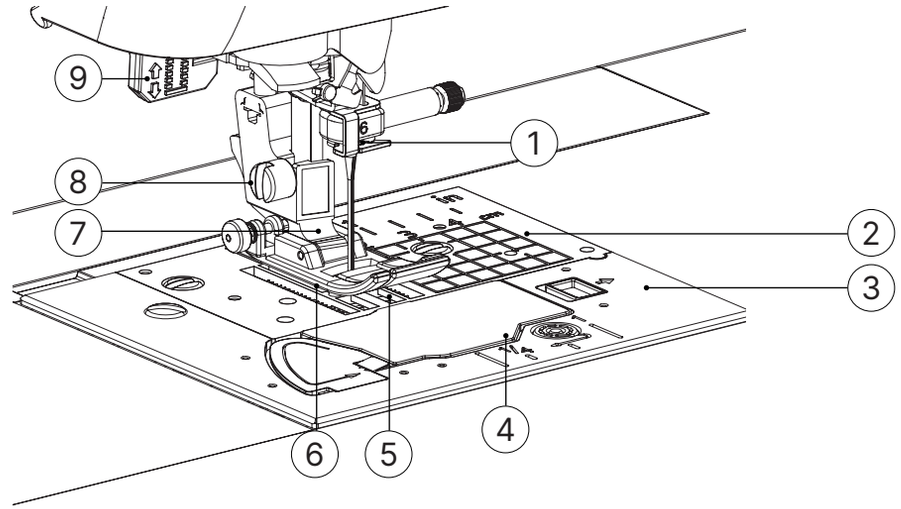

1. Needle Bar Thread Guide

Pass the upper thread through the needle bar thread guide.

2. Needle Plate

The needle plate is marked with guidelines for straight seams.

3. Needle Plate Cover

Remove the needle plate cover to clean the bobbin case and outer rotary hook.

4. Bobbin Cover / Inner Rotary Hook

Remove the bobbin cover, then insert the bobbin into the bobbin case.

5. Feed Dogs

The feed dogs move the fabric along the sewing direction.

6. Presser Foot

The presser foot applies even pressure on the fabric while sewing. Attach the appropriate presser foot for the selected stitch.

7. Presser Foot Holder

The presser foot is attached to the presser foot holder.

8. Presser Foot Holder Screw

Use the presser foot holder screw to secure the presser foot in place.

9. Buttonhole Lever

Lower the buttonhole lever when sewing buttonholes and bar-tack stitches, or when darning.

Embroidery Unit

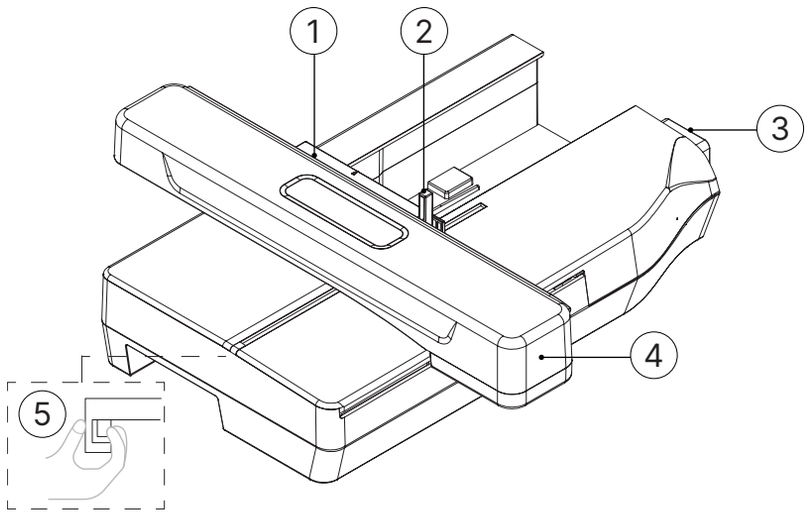

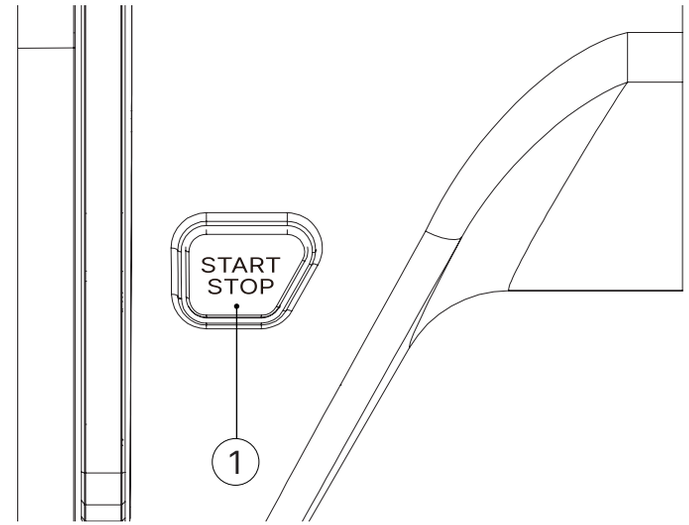

1. Embroidery Frame Holder

Insert the embroidery frame into the frame holder to secure it in place.

2. Frame Securing Lever

Press the frame securing lever down to lock the embroidery frame in place.

3. Embroidery Unit Connector

When attaching the embroidery unit, insert the embroidery unit connector into the connector port.

4. Carriage

The carriage automatically moves the embroidery frame during embroidering.

5. Release Button (Located under the embroidery unit)

Press the release button to detach the embroidery unit.

Caution

· After securing the embroidery frame in the frame holder, be sure to correctly lower the frame securing lever.

1. Start / Stop Button

Press the Start / Stop button to start or stop sewing. When this button is pressed, the machine will sew at a slow speed at the beginning of sewing.

When sewing stops, the needle is lowered in the fabric. For details, refer to the "Starting to Sew" section. The button color changes depending on the embroidery machine's operation mode.

Green: The sewing machine is ready to sew or is sewing.

Red: The sewing machine cannot sew.

Orange: The sewing machine is winding the bobbin thread, or the bobbin winding spindle is moved to the right.

Operation Panel and Operation Keys

Sewing Home Screen

Embroidery Home Screen

LCD Display (Touch Panel)

Displays settings and information for the selected pattern.

Touch the keys shown on the LCD to perform operations.

For details, refer to "LCD Operation".

Using the Extension Table / Additional Work Table

Pull the top of the extension table to open the accessory box.

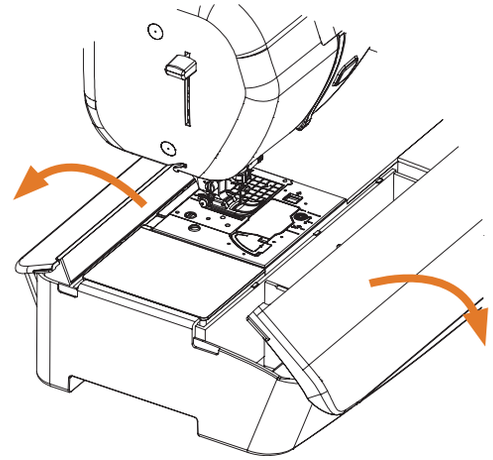

The presser foot accessory tray is stored in the accessory box of the extension table.

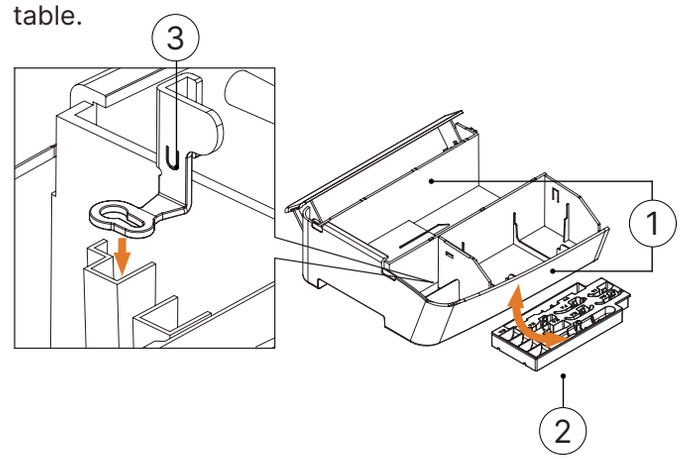

1. Storage compartment of the extension table
2. Presser Foot Accessory Tray
3. Embroidery Presser Foot "U"

Accessory List

Depending on the machine model purchased, the included accessories may differ from those listed in the table below. For details on the accessories included with your machine and their part numbers, refer to the Quick Operation Guide.

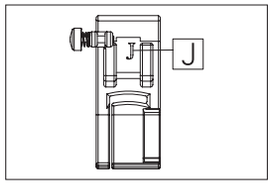

Zigzag Presser Foot "J" (Attached to machine)

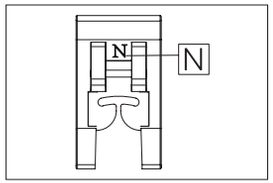

Monogramming Presser Foot "N"

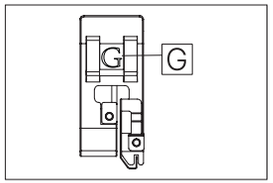

Overcasting Presser Foot "G"

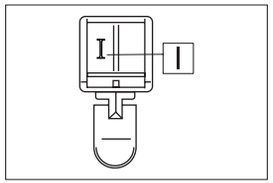

Zipper Presser Foot "I"

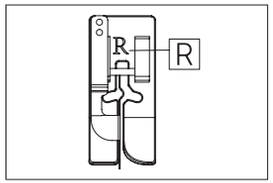

Blind Stitch Presser Foot "R"

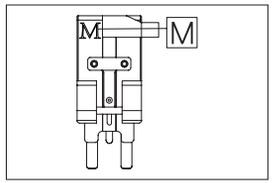

Button Sewing Presser Foot "M"

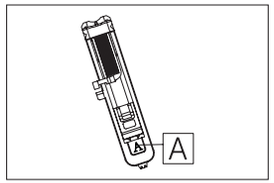

Buttonhole Presser Foot "A"

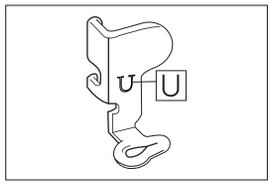

Embroidery Presser Foot "U"

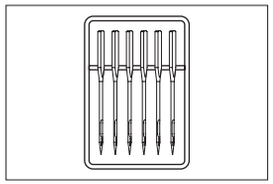

Needle Set:

75/11 (5 needles)

90/14 (5 needles)

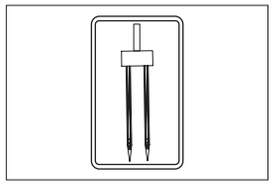

Twin Needle

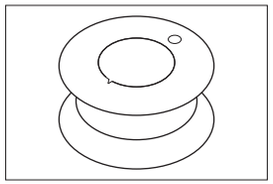

Bobbins (x5)

(1 bobbin is installed on the machine)

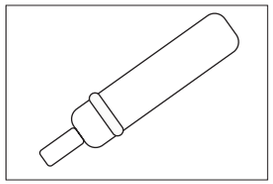

Seam Ripper

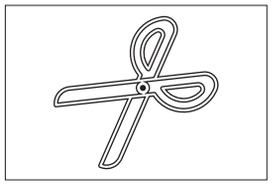

Scissors

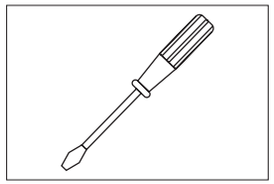

Screwdriver

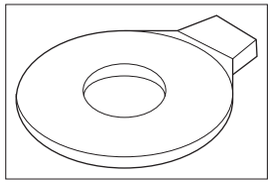

Disc-shaped Screwdriver

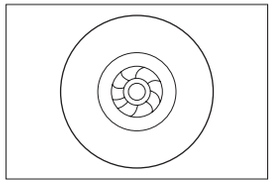

Spool Cap (Large)

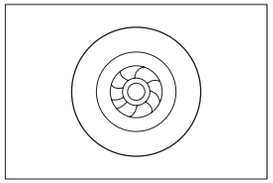

Spool Cap (Medium)

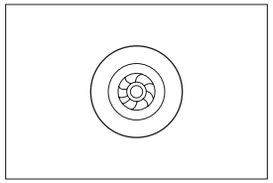

Spool Cap (Small)

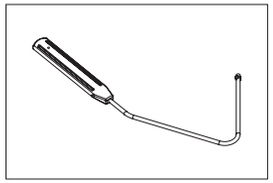

Presser Foot Lifter

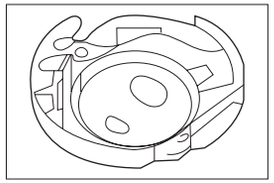

Standard Inner Rotary Hook (Attached to machine) (spare parts)

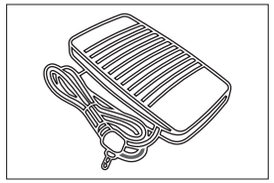

Foot Controller

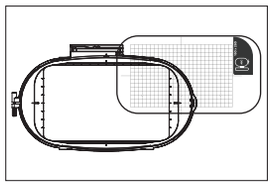

Embroidery Frame Set

26 × 16 cm / 10.2 × 6.3 in

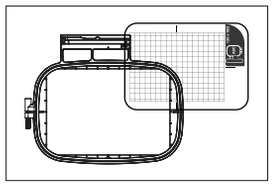

Embroidery Frame Set

18 × 13 cm / 7.1 × 5.1 in

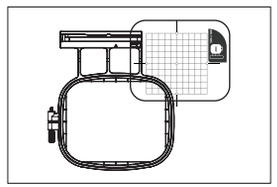

Embroidery Frame Set

10 × 10 cm / 3.9 × 3.9 in

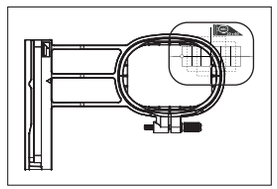

Embroidery Frame Set

6 × 2 cm / 2.4 × 0.8 in

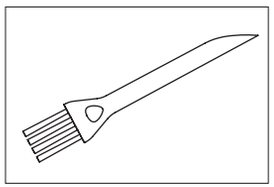

Cleaning Brush

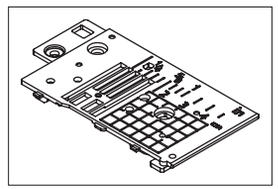

One-Hole Needle Plate

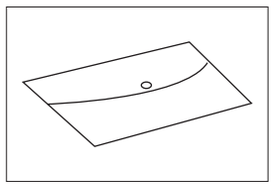

Accessory Bag

Tips

·Please contact Ricoma / your local authorized dealer to obtain optional accessories or parts.

· Contact your nearest Ricoma / authorized dealer for a complete list of optional accessories available for your sewing machine model.

·Be sure to use the accessories required for this machine.

Using the Utility Stitch Table Described in the "Sewing" Section

Utility stitch numbers vary depending on the machine model. Refer to the "Stitch Number" section for information related to the machine you purchased.

Stitch Name	Stitch	Stitch Number	Presser Foot
Basting Stitch		1 - 08	J
Straight Stitch (Left)		1 - 01	
		1 - 02	
Straight Stitch (Center/Middle)		1 - 03	
Triple Stretch Stitch		1 - 05	

Chapter 2 Turning the Sewing Machine On / Off

Warn

·Use only ordinary household electricity as the power source for the machine. Using other power sources may result in fire, electric shock, or damage to the machine.

·Make sure the plug on the power cord is firmly inserted into the household power outlet on the machine and the electrical outlet. Failure to do so may result in fire or electric shock.

·Never insert the plug on the power cord into an electrical outlet that is in poor condition.

·Be sure to turn off the main power switch and unplug the power cord in the following cases:

When leaving the machine unattended.

After using the machine.

When there is a power outage during use.

When the machine is not operating normally due to a poor connection or disconnection.

During an electrical storm.

Caution

·Only use the power cord included with this machine.

·Do not use extension cords or share a multiple outlet adapter with other electrical equipment. Doing so may result in fire or electric shock.

·Do not touch the power cord plug with wet hands. Doing so may cause electric shock.

·When unplugging the power cord, first turn off the main power switch. Always hold the plug portion when unplugging the power cord. Pulling directly on the cord may damage it, causing fire or electric shock.

·Do not cut, damage, modify, bend, stretch, twist, or bundle the power cord. Do not place heavy objects on the cord. Do not expose the cord to heat. Doing so may damage the cord and cause fire or electric shock. If the power cord or plug is damaged, take the machine to a Ricoma dealer / authorized service center for repair before continuing use.

·If the machine will not be used for an extended period, always unplug the power cord. Failure to do so may result in fire.

·When the embroidery machine is left unattended, always turn off the main power switch of the embroidery machine or unplug the power cord from the electrical outlet.

·When servicing the embroidery machine or removing covers, always unplug the power cord of the embroidery machine.

Turning On the Sewing Machine

A. Make sure the sewing machine is turned off (the main power switch is set to "O"), then insert the power cord into the power inlet on the right side of the sewing machine.

B. Insert the plug of the power cord into a household electrical outlet.

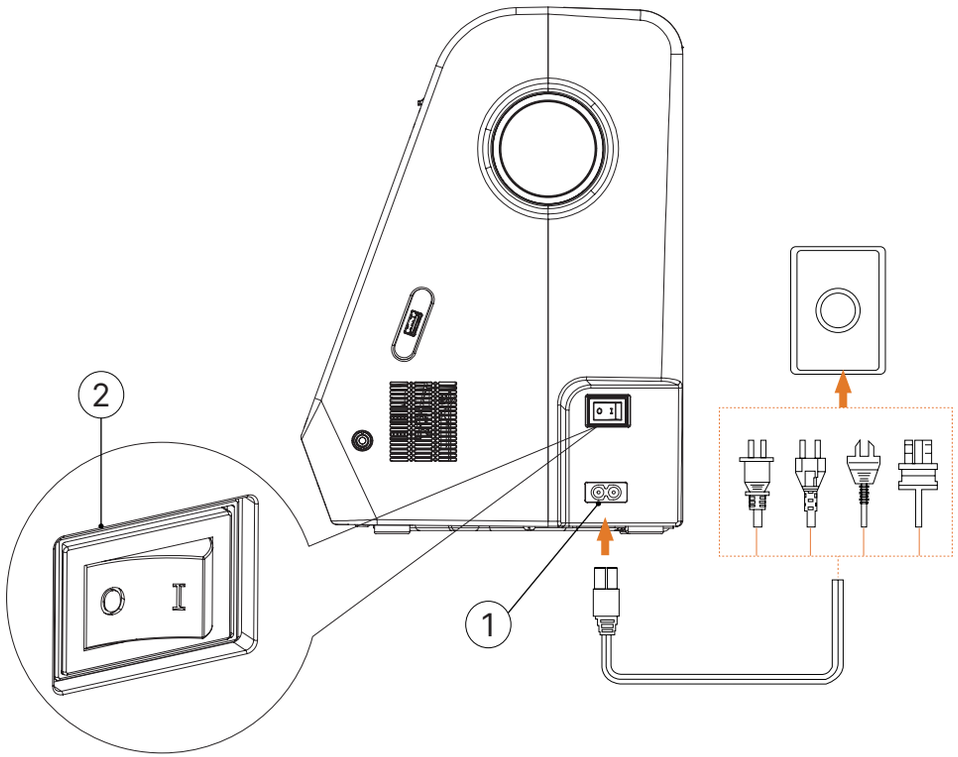

1. Power Inlet
2. Main Power Switch

C. Press the main power switch located on the right side of the sewing machine to turn it on (set to "I").

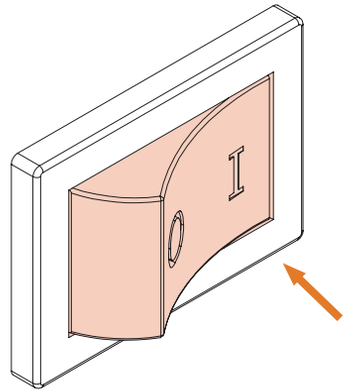

Tips

·When the embroidery machine is turned on, the needle and feed dogs may make sounds when moving. This is not a malfunction.

·If the machine is turned off while sewing using the "Sewing" function, the operation will not resume after turning the power on again.

D. When the machine is turned on, a start-up animation will be displayed.

Turning Off the Machine

A. Make sure the sewing machine has stopped sewing.

B. Press the main power switch on the right side of the machine (towards the "O" symbol) to turn it off.

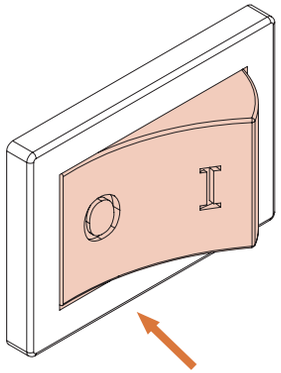

Selecting Machine Settings for the First Time

When turning on the machine for the first time, select a language. When the setting screen appears automatically, follow the steps below:

A. Touch to select the language.

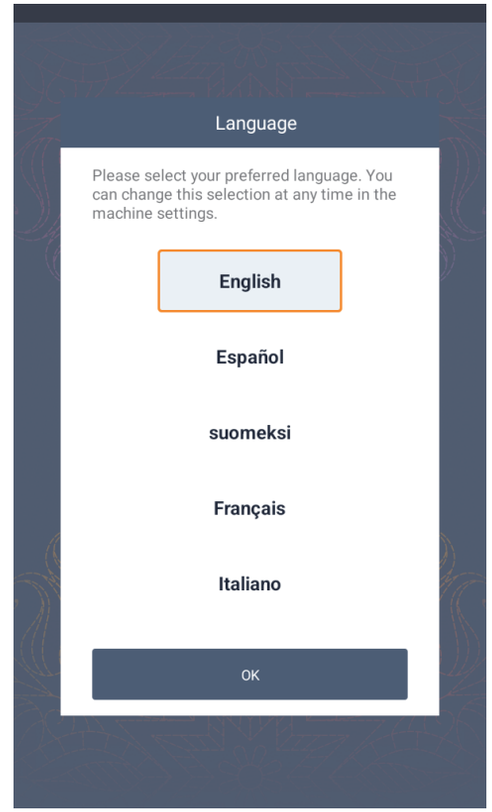

B. Touch OK / Confirm.

Chapter 3 LCD Operation

Viewing the LCD

When the power is turned on, a start-up animation will be displayed. After the animation ends, the machine's main screen will appear.

When the embroidery unit is not attached to the machine, the **Sewing Home Screen** will be displayed after the start-up animation ends. When the embroidery unit is attached, the **Embroidery Home Screen** will be displayed after the start-up animation ends.

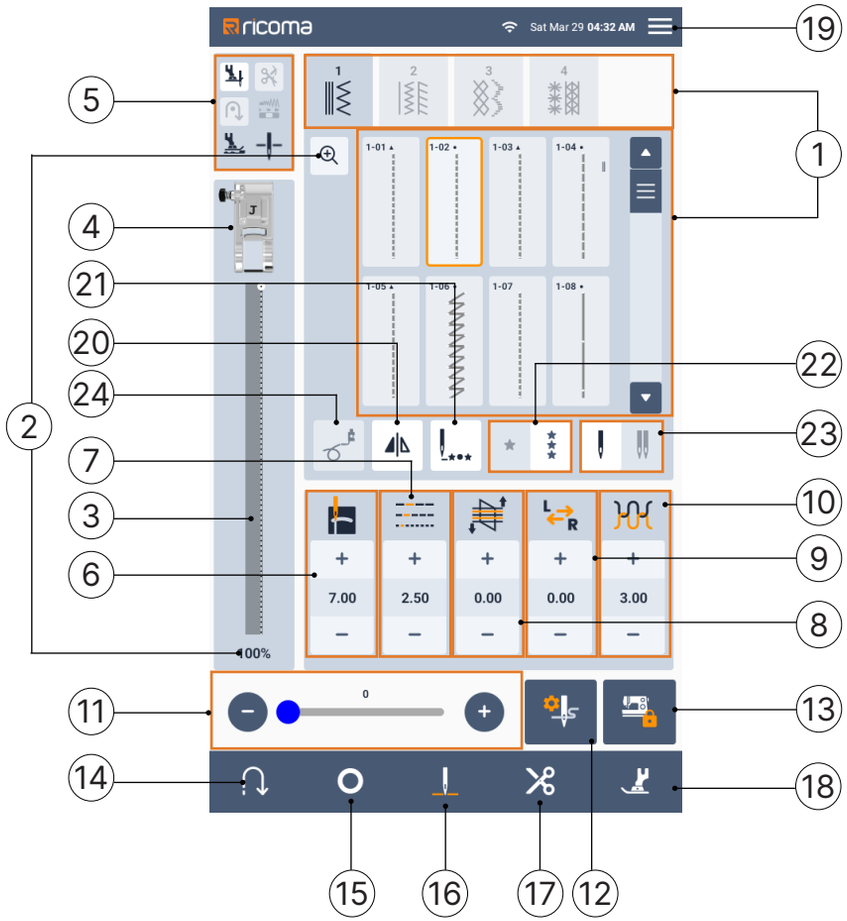

Sewing Home Screen

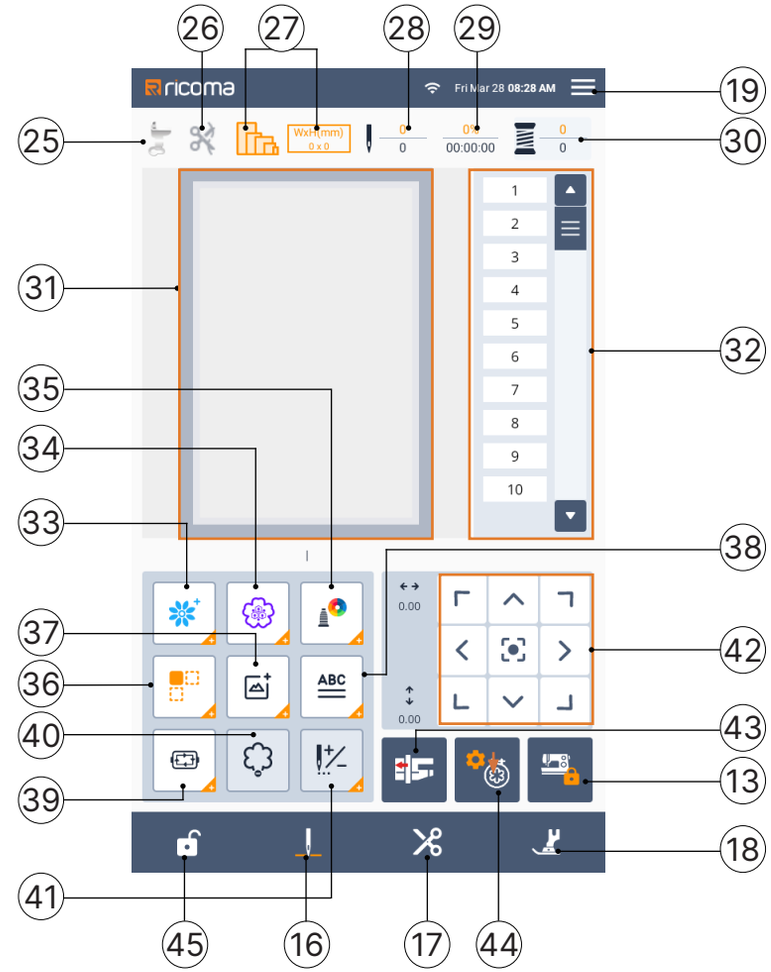

Embroidery Home Screen

No.	Function Name	Description	Page
1	Stitch Selection	Select The Desired Stitch For Sewing.	Page 52
2	Pattern Size Display	Displays The Approximate Size Of The Selected Pattern. Click The Magnifying Glass Icon To Adjust The Size.	——
3	Stitch Preview	Displays A Preview Of The Selected Stitch. The Approximate Size Of The Selected Pattern Is Shown At The Bottom Of The Preview.	——
4	Presser Foot	Displays The Presser Foot Required For The Current Stitch.	——
5	Status Indicator Area	When A Function Is Turned On, The Corresponding Icon In This Area Is Highlighted; Conversely, The Icon Appears Dim(E.g., When The Automatic Thread Cutting Function Is On: The Status Indicator Icon Changes From To	——
6	Stitch Width	Displays The Stitch Width Of The Currently Selected Stitch Pattern; Press "+" Or "-" To Adjust The Stitch Width.	——
7	Stitch Length	Displays The Stitch Length Of The Currently Selected Stitch Pattern; Press "+" Or "-" To Adjust The Stitch Length.	Page 59
8	Feed Balance Adjustment	When The Holes In The Length Direction Cannot Be Aligned During Stitching, Use This Function To Fine-Tune The Stitch Length.	Page 60
9	L / R Shift	Displays The Left/Right Shift Trend From The Original Center Line Of The Zigzag Stitch.	——
10	Thread Tension	Displays The Automatic Thread Tension Setting For The Currently Selected Stitch Pattern.	Page 61
11	Sewing Speed Adjuster	Press "+", "-", Or Slide The Center Point To Adjust The Sewing Speed.	Page 53
12	Sewing Settings	Click The Icon To Enter The Sewing Settings Screen, Where You Can Change Default Sewing Parameters.	Page 25
13	Maintenance Mode	Press This Key Before Changing The Needle Or Presser Foot To Lock All Key Functions To Prevent Accidental Achine Operation.	——
14	Reverse Stitch	Click / Press And Hold To Activate The Reverse Sewing Function; The Specific Effect Depends On The Stitch Type.	Page 56
15	Reinforcement Stitch	Use This Button To Sew A Stitch Repeatedly For Reinforcement.	Page 56
16	Needle Position Button	Press The Needle Position Button To Raise Or Lower The Needle. Press The Button Twice To Sew One Stitch.	——

No.	Function Name	Description	Page
17	Manual Thread Cutter	After Stopping Sewing, Press This Button To Cut The Upper Thread And Bobbin Thread.	——
18	Presser Foot Button	Press This Button To Lower The Presser Foot And Apply Pressure To The Fabric. Press The Button Again To Raise The Presser Foot.	——
19	System Settings	Click The Icon To Enter The System Settings Screen, Where You Can Configure System Parameters.	Page 27
20	Mirror Image Key	After Selecting A Stitch Pattern, Use This Key To Create A Horizontal Mirror Image Of The Stitch Pattern.	Page 63
21	Return To Start Key	After Sewing Stops, Press This Key To Return To The Beginning Of The Pattern.	——
22	Single / Repeat Stitch Key	Press This Key To Select Either A Single Pattern Or Continuous Patterns. Depending On The Selected Stitch, This Function May Be Disabled.	——
23	Single / Double Needle Mode Switch	Click This Key To Quickly Switch Between Single-Needle Or Double-Needle Mode.	——
24	Free Motion Quilting	Click The Icon To Enter Free Motion Quilting Mode. In This Mode, The Fabric Can Be Moved In Any Direction. Tips: This Function Cannot Be Enabled For Certain Stitches.	Page 66
25	Embroidery Presser Foot Display Area	Displays The Required Presser Foot Type For The Embroidery Model.	——
26	Auto-Start After Thread Cutting Status Indicato	When Highlighted, The Automatic Start Function After Thread Cutting Is Enabled; Otherwise, It Is Disabled.	Page 26
27	Hoop Type Display Area	After Selecting A Pattern, The Orange Frame Indicates A Usable Embroidery Hoop, And The Gray Frame Indicates An Unusable Embroidery Hoop.	——
28	Stitch Count Progress	Displays The Stitch Count Progress Of The Current Embroidery Pattern.	——
29	Time Progress	Displays The Time Progress Of The Current Embroidery Pattern.	——
30	Color Sequence Progress	Displays The Color Sequence Progress Of The Current Embroidery Pattern.	——

No.	Function Name	Description	Page
31	Embroidery Display Area	Simulates The Status (Position, Size, Color, Current Embroidery Area, Etc.) Of The Pattern Within The Hoop In Real-Time.	——
32	Color Sequence Selector	Automatically Divides The Color Sequence Based On The Type Of Embroidery Design And The Embroidery Order, And Displays It Synchronously In The Embroidery Display Area.	——
33	Pattern Selection	Select An Embroidery Pattern. External Patterns Imported Via Usb Can Also Be Selected.	Page 141
34	Built-In Patterns	Built-In Patterns. Select From The Free Patterns That Come With The Machine.	Page 94
35	Thread Color Setting	Linked With The Color Sequence Selector (Item 32), Allows You To Customize The Thread Color For Each Color Sequence.	Page 98
36	Pattern Setting	Allows You To Adjust The Pattern's Size, Rotation, Mirror Image, Position, Etc.	Page 146
37	Pattern Combination	Allows You To Reorder And Combine Multiple Patterns Or Lettering Into One New Pattern.	Page 151
38	Lettering	Allows You To Input Custom Letters For Embroidery.	Page 142
39	Needle Drop Point Selection / Pattern Path Preview	Allows You To Select The Needle's Position Relative To The Pattern, And Allows The Embroidery Unit To Move The Hoop In A Rectangle Along The Maximum Dimensions Of The Pattern.	Page 154
40	Return To Embroidery Stop Position	In Embroidery Mode, Press This Key To Move The Needle To The Position Where The Machine Last Stopped Embroidering.	——
41	Set Stitch Start Position	Customize The Stitch Count Progress For Embroidery, Thereby Adjusting The Needle's Position Relative To The Pattern. Commonly Used For Re-Embroidering Or Patching.	Page 157
42	Move Hoop	Used To Move The Embroidery Hoop.	——
43	Return Hoop	Moves The Embroidery Hoop Back To The Home Position.	——
44	Embroidery Settings	Click The Icon To Enter The Embroidery Settings Screen, Where You Can Change Default Embroidery Parameters.	Page 26
45	Enter/Exit Embroidery Mode	When the lock icon is open, the machine enters Embroidery Mode; when locked, it exits Embroidery Mode.	——

Using the Settings Key

Click to change the default sewing parameters.

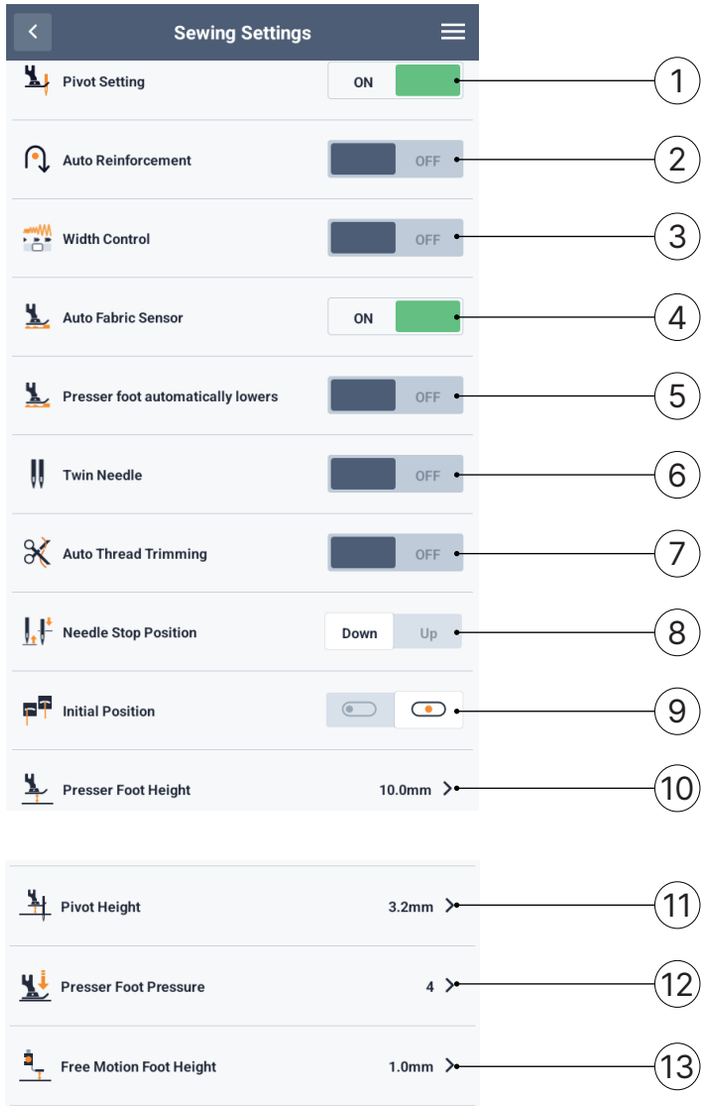

Sewing Settings

1. Enable / Disable Pivot Function.

2. Enable / Disable Automatic Reinforcement Stitch Function.

3. When enabled, the sewing speed adjuster can control the zigzag stitch width.

4. During sewing, internal sensors automatically detect the fabric thickness to ensure smooth fabric feeding.

5. When enabled, the presser foot will automatically lower upon pressing the start button.

6. Enable / Disable Twin Needle Mode.

7. Enable / Disable Automatic Thread Cutting Function.

8. Select whether the needle stop position (the needle's position when the machine is idle) is at the highest or lowest position. When using the pivot key, the needle defaults to the lowest position.

9. Initial needle position when the machine is powered on.

10. Adjust the presser foot height (select the height when the presser foot is lifted).

11. Select the presser foot height for pivot setting, available in three levels: 3.2 mm / 0.13 in, 5.0 mm / 0.19 in, and 7.5mm / 0.29 in.

12. Adjust the presser foot pressure (a higher value means greater pressure; the normal sewing pressure is set to "3").

13. Set the presser foot height when in free motion sewing mode.

After attaching the embroidery unit and turning on the machine, click to enter Embroidery Settings.

Embroidery Settings

1. View the current embroidery hoop type.

2. Select the type of embroidery thread.

3. Change the background color of the embroidery display area.

4. Select the embroidery presser foot height during sewing.

5. Adjust the upper thread tension for embroidery.

6. Adjust the maximum embroidery speed.

7. When enabled, the automatic thread cutting function is triggered once when the number of jump stitches in the embroidery exceeds the set value.

8. If the machine stops due to a thread break during embroidery, after re-threading and restarting the machine, embroidery will resume 10 stitches back from where the break occurred.

(Tips: If a thread break occurs at stitch 100, causing the machine to stop, after re-threading and restarting, embroidery will resume from stitch 90.)

9. When enabled, the function of the hoop movement keys will be reversed.

10. When embroidering patterns that use the same thread color, the machine will automatically cut the thread and continue embroidering the next area.

Click on the settings page , then click to enter System Settings.

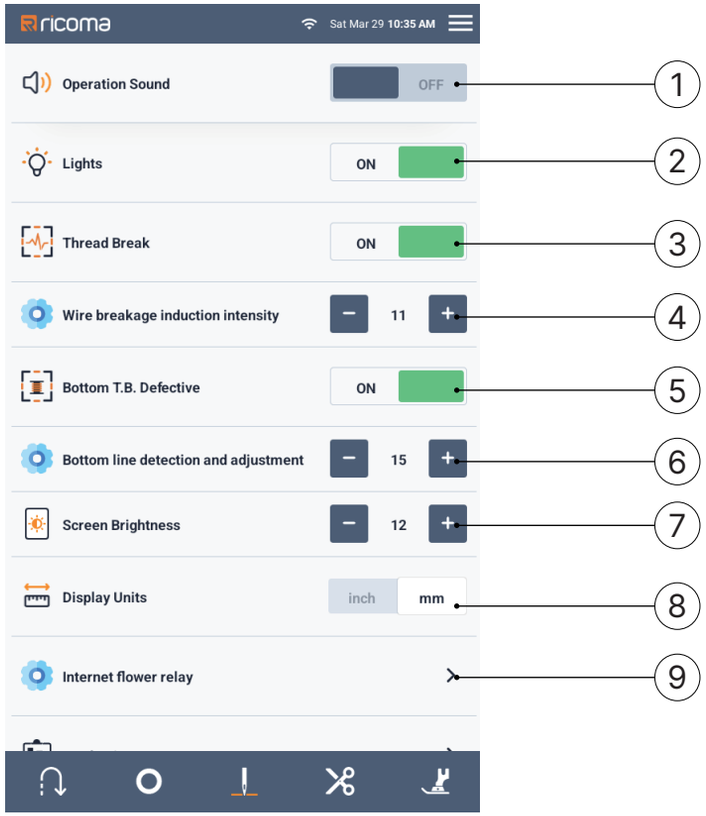

System Settings 1

1. Operation Sound: Enable / disable the system operation sounds.

2. Lights: Turn the needle area and work area lights on / off.

3. Thread Break: Enable/disable the upper thread break detection function.

4. Wire Breakage Induction Intensity: If the machine alarms for an upper thread break but the thread is not broken, increase the value. Conversely, if the thread is broken but the machine does not alarm, decrease the value.

(Tips: This adjustment appears only when the thread break detection function is enabled.)

5. Bottom T.B. Detective: Enable/disable bobbin thread detection.

6. Bottom Line Detection Adjustment: When bobbin thread detection is enabled, if the machine alarms indicating no bobbin thread but there is still thread remaining on the bobbin, decrease the value. Conversely, if the bobbin is empty but the machine does not alarm, increase the value.

(Tips: This adjustment appears only when the bobbin thread detection function is enabled.)

7. Screen Brightness: Adjust the brightness of the screen.

8. Display Units: Select inches or mm as the unit of measurement for the machine.

9. Internet Flower Relay: Patterns can be transferred via WiFi function.

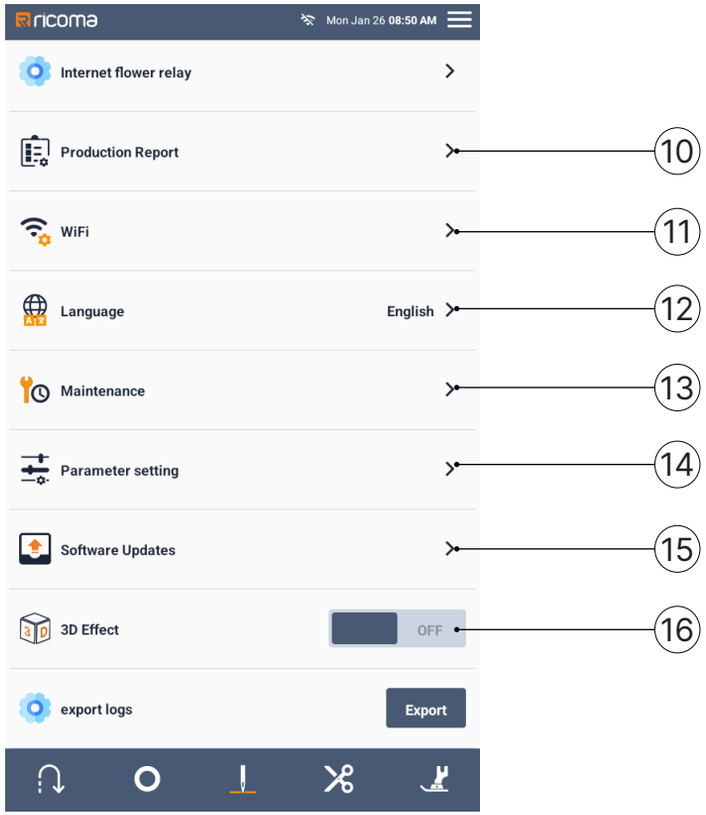

System Settings 2

10. Production Report: View the production report.

11. Enable / Disable WiFi.

12. Language: Select the display language.

13. Maintenance: View machine maintenance records.

14. Parameter Setting: Used to import / export system parameters.

15. Software Updates: Used to update application and software versions.

16. 3D Effect: Enable / disable the 3D effect in the embroidery display area.

Click to enter the Control Center.

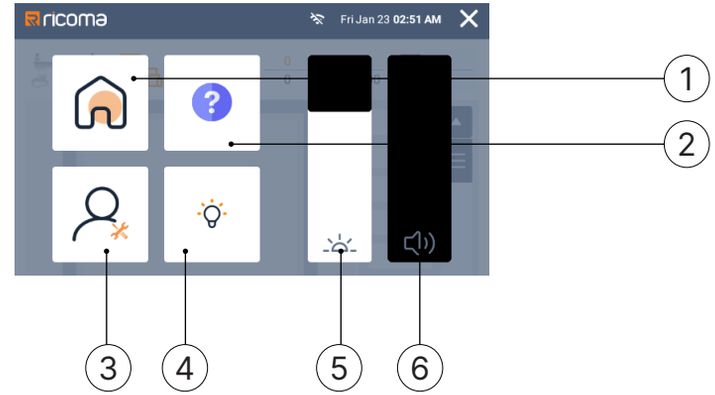

Control Center

1. Return to Home

2. Video Tutorials

3. System Settings

4. Quick Light On / Off

5. Adjust Screen Brightness

6. Adjust Volume

Selecting the Display Language

A. Click.

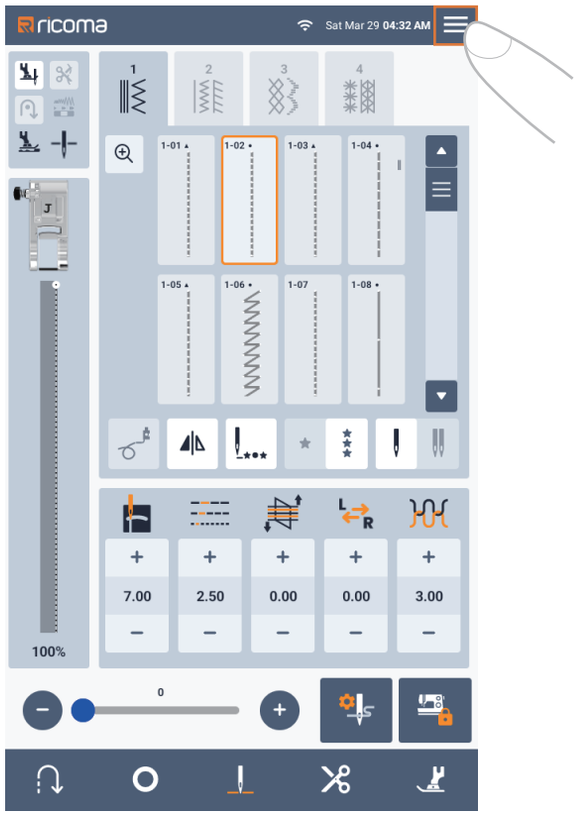

B. Click to enter the System Settings menu.

C. Find Language.

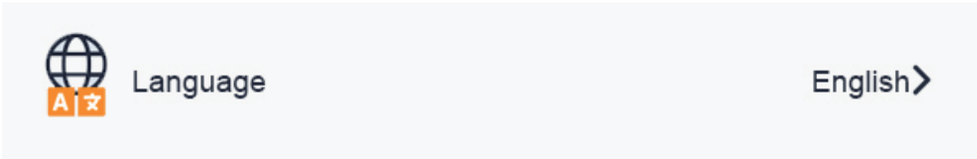

D. Select the desired display language. Once selected, click to return.

Chapter 4 Bobbin Winding / Installation

Caution

· Only use bobbins designed specifically for this machine. Using other bobbins may result in personal injury or damage to the machine.

· The included bobbin is specifically designed for this machine. If you use a bobbin designed for a different model, the sewing machine may not function correctly.

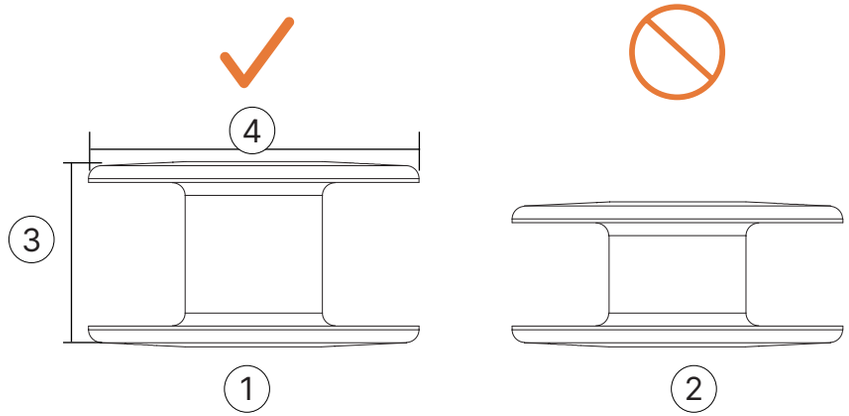

* Actual Size

1. This model
2. Other models
3. 11.5 mm / 0.45 in
4. Diameter 20.5 mm / 0.81 in

Winding the Bobbin

This section describes how to wind thread onto the bobbin.

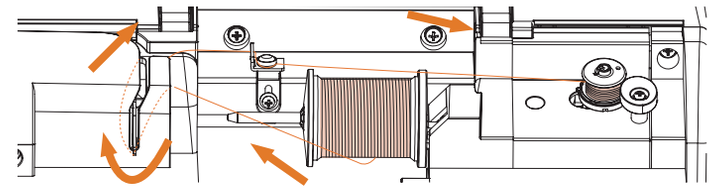

A. Open the top cover.

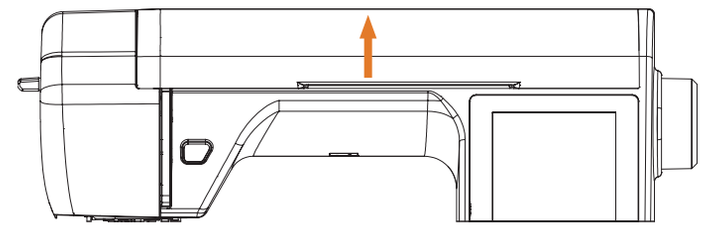

B. Place the bobbin onto the bobbin winder spindle, aligning the spring on the spindle with the groove in the bobbin. Press down on the bobbin until it snaps into place.

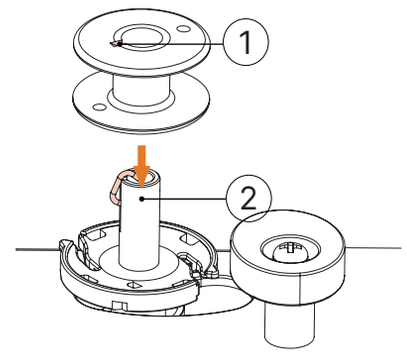

1. Groove
2. Bobbin Winder Spindle Spring

C. Slide the bobbin winder in the direction of the arrow until it snaps into place.

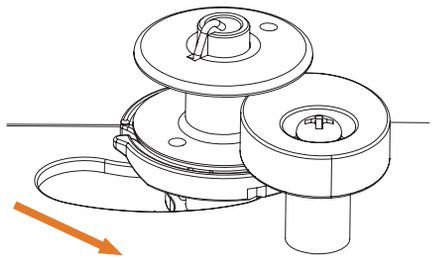

START STOP The Start / Stop button lights up orange.

D. Remove the spool cap from the spool pin.

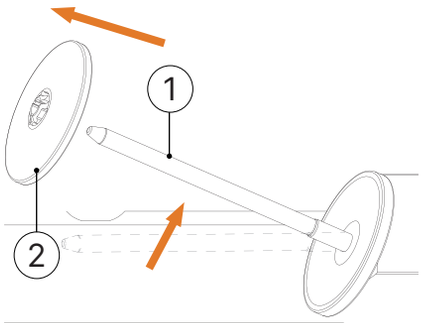

1. Spool Pin
2. Spool Cap

E. Place the spool of thread for the bobbin onto the spool pin.

Slide the spool onto the pin so that the spool is horizontal and the thread unwinds from the bottom towards the front.

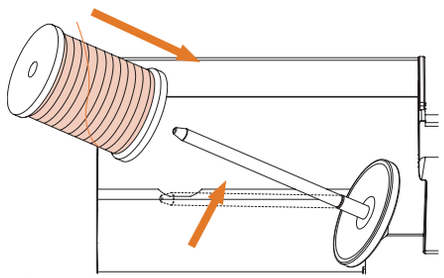

· If the spool is not positioned to allow the thread to unwind correctly, the thread may become tangled on the spool pin.

F. Slide the spool cap onto the spool pin.

As shown in the illustration, slide the spool cap as far to the right as possible, with the rounded side facing left.

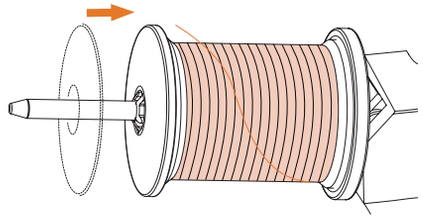

Caution

· If the spool or spool cap is installed incorrectly, the thread may tangle on the spool pin and could cause the needle to break.

· There are three sizes of spool caps. Use the size that best fits the spool being used. If the spool cap is too small for the spool, the thread may catch on the spool's slot or could damage the machine.

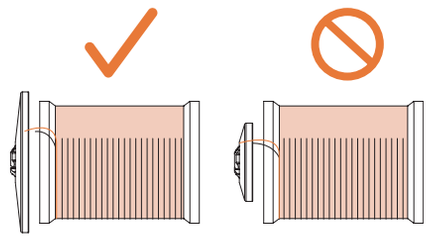

G. As shown, hold the thread near the spool with your right hand, and pull the thread out with your left hand. Then, guide the thread from behind the thread guide cover to the front.

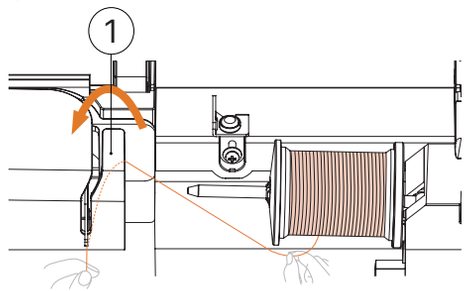

1. Thread Guide Cover

H. Pass the thread under the thread guide plate, then pull it out to the right.

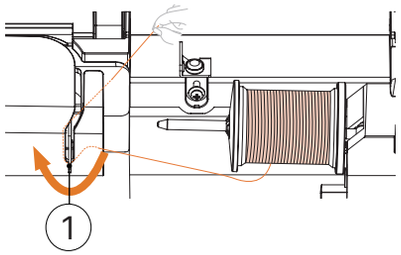

1. Thread Guide Plate

I. Pass the thread under the thread guide shaft, then wind it counterclockwise under the pre-tension disk.

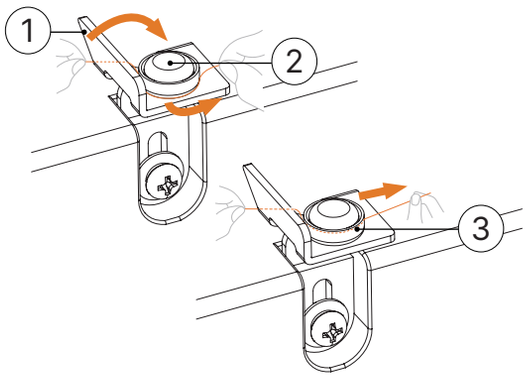

1. Thread Guide
2. Pre-tension Disk
3. Pull the thread taut

Caution

· Make sure the thread passes under the pre-tension disk.

J. While holding the thread with your left hand, use your right hand to wind the pulled thread clockwise around the bobbin five or six times.

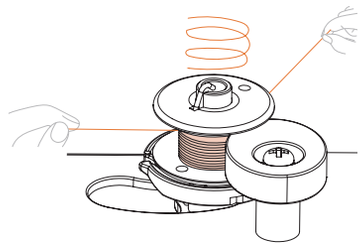

Caution

· Ensure the thread between the spool and the bobbin is pulled straight.

· Be sure to wind the thread onto the bobbin clockwise, otherwise the thread may tangle on the bobbin winder spindle.

K. Pass the thread end through the slit in the bobbin winder seat, then pull the thread to the right to cut off any excess.

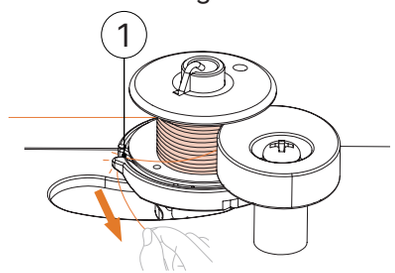

1. Slit in bobbin winder seat (equipped with built-in thread cutter).

Caution

· Always cut the thread as instructed. When winding the bobbin, if the thread is not cut using the built-in cutter in the bobbin winder seat slit, the thread may become tangled in the bobbin, or may cause the needle to bend or break when the bobbin thread runs low.

L. Slide the speed controller to the right.

Speed Controller

Caution

·The bobbin winding speed varies depending on the type of thread being wound onto the bobbin.

M. Turn on the machine.

N. Press the Start / Stop button once to begin winding the bobbin.

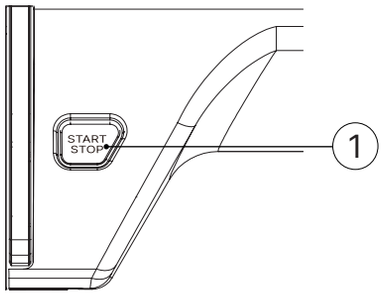

1. Start / Stop Button

O. When the bobbin winding slows down, press the Start / Stop button once to stop the machine.

Caution

· Stop the machine when the bobbin winding slows down, otherwise the machine may be damaged.

P. Use scissors to cut the thread end wound around the bobbin.

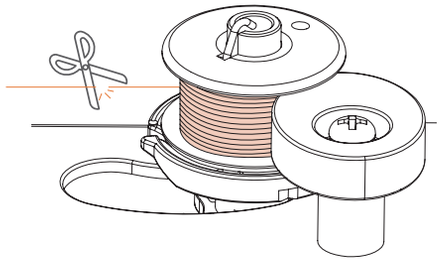

Q. Slide the bobbin winder spindle to the left, then remove the bobbin from the spindle.

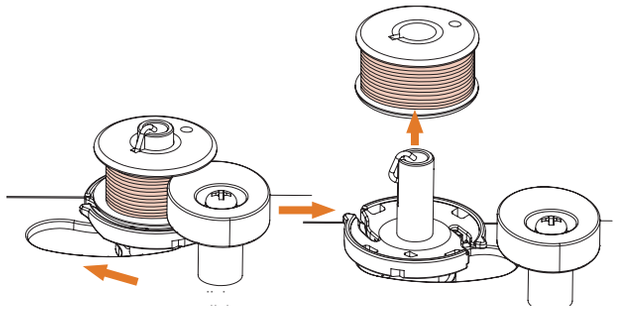

Tips

· If the bobbin winder spindle is set to the right side, the needle will not move.
(Sewing is not possible.)

R. Remove the spool of bobbin thread from the spool pin.

Tips

· A clicking sound may be heard when the machine starts or when the handwheel is turned after winding thread onto the bobbin; this is not a malfunction.

Installing the Bobbin

Install the bobbin with the wound thread.

Simply insert the bobbin into the rotary hook and pass the thread through the groove in the needle plate cover. You can start sewing without pulling up the bobbin thread.

Tips

· For details on pulling up the bobbin thread when sewing gathers or free motion quilting, refer to "Pulling Up the Bobbin Thread".

Caution

· Use a correctly wound bobbin, otherwise the needle may break or the thread tension may be incorrect.

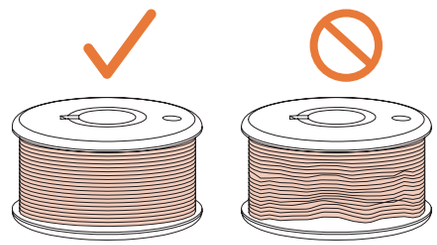

· Before inserting or changing the bobbin, be sure to touch the Lock button on the operation panel to lock all keys and buttons. Otherwise, injuries may occur if the machine starts by pressing the Start/Stop button or any other button.

A. Touch the "1" Needle Position Button once or twice to raise the needle.

B. Touch the "2" Presser Foot Button to raise the presser foot.

C. Touch the "3" Lock Button to lock the machine.

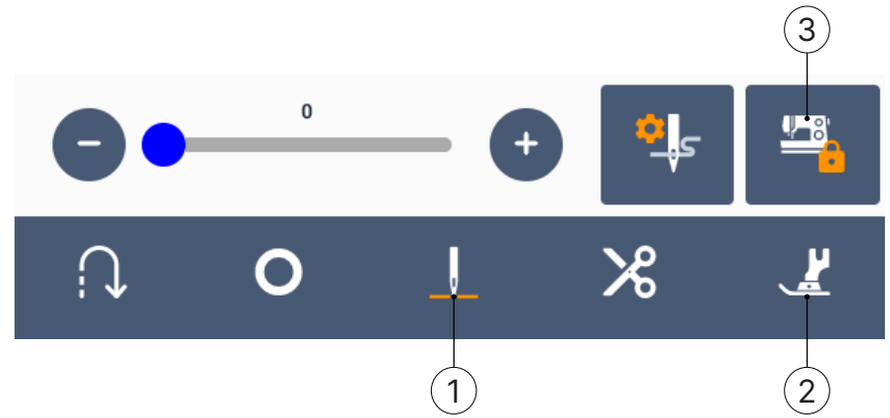

D. Raise the presser foot lever.

E. Slide the bobbin cover latch to the right.

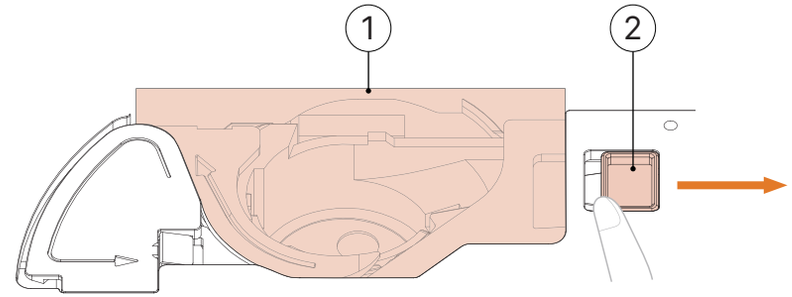

1. Bobbin Cover
2. Latch

F. Remove the bobbin cover.

G. Hold the bobbin in your right hand so that the thread unwinds to the left, and hold the thread end with your left hand. Then, use your right hand to place the bobbin into the rotary hook.

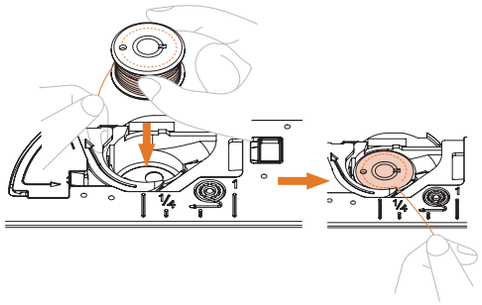

H. Press down on the bobbin with your right hand "01". With your left hand, pull the thread end around the protrusion on the needle plate cover "02".

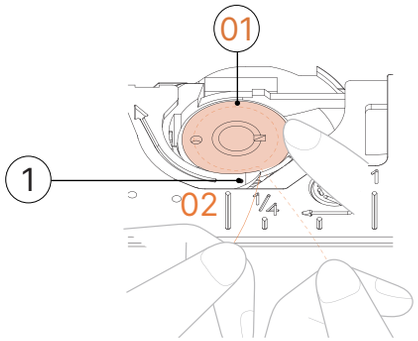

1. Protrusion

Caution

· Be sure to hold the bobbin down with your finger and let the bobbin thread unwind correctly. Otherwise, the thread may break or the tension may become incorrect.

Tips

· Always thread the machine as instructed.

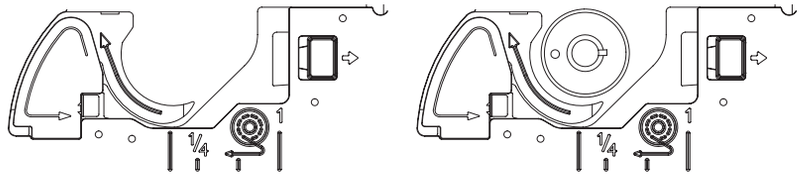

I. Gently press down on the bobbin with your right hand "01". Guide the thread through the groove in the needle plate cover "02", then gently pull it out with your hand "03".

· The bobbin thread is now passing through the tension spring of the rotary hook.

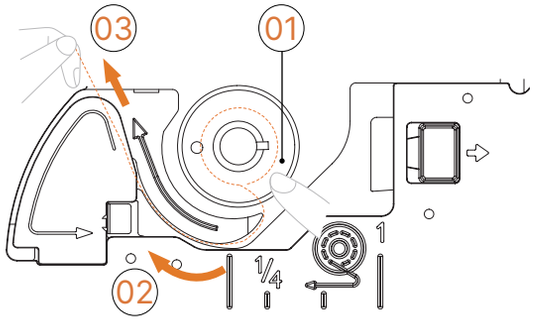

J. While gently pressing down on the bobbin with your right hand "01", continue guiding the thread through the groove with your left hand "02". Then, cut the thread using the thread cutter "03".

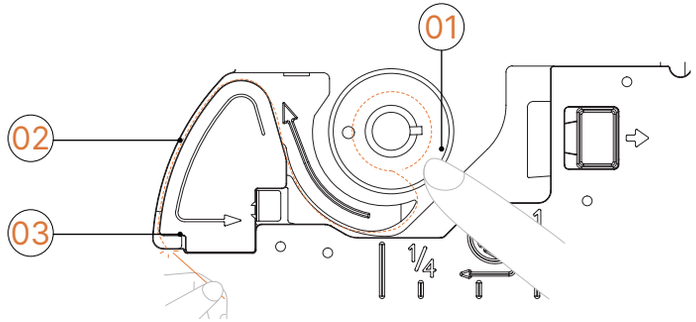

Caution

· If the thread is not correctly inserted into the tension regulating spring on the inner hook, the thread tension may be incorrect.

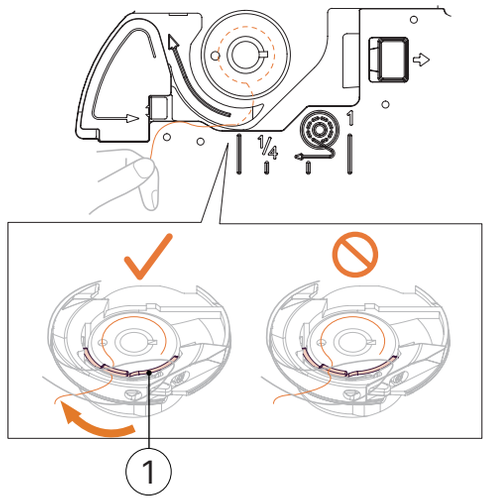

1. Tension regulating spring

K. Replace the bobbin cover.

Insert the protruding part at the bottom left corner of the bobbin cover, then gently press down on the right side.

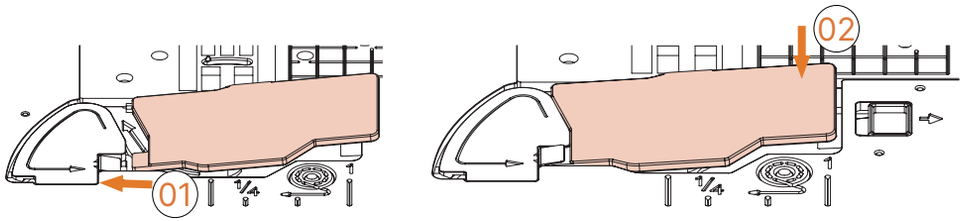

Bobbin threading is now complete.

Next, we will thread the upper thread. Continue with the steps in "Upper Threading".

Tips

· You can start sewing without pulling up the bobbin thread. If you want to pull up the bobbin thread before starting to sew, follow the steps in "Pulling up the Bobbin Thread".

L. Tap to unlock all keys and buttons.

Chapter 5 Upper Threading

Caution

· There are three sizes of spool caps, allowing you to choose the one that best fits the spool size you are using.

If the spool cap is too small for the spool in use, the thread may get caught on the spool's groove or break.

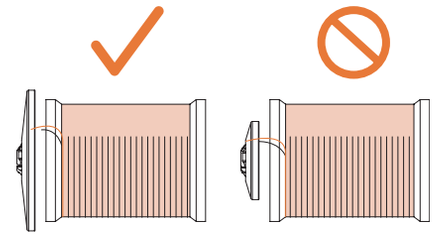

· When threading the upper thread, follow the instructions below carefully. If the upper thread is not threaded correctly, it may cause thread tangling, needle bending, or needle breakage.

· Use the correct needle and thread combination. For detailed information on correct combinations, see the section "Fabric / Thread / Needle Combination".

Upper Threading

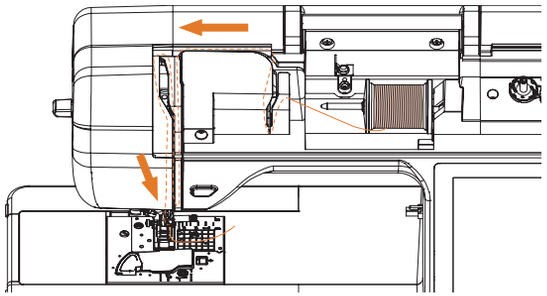

A. Turn on the machine.

B. Raise the presser foot lever to lift the presser foot.

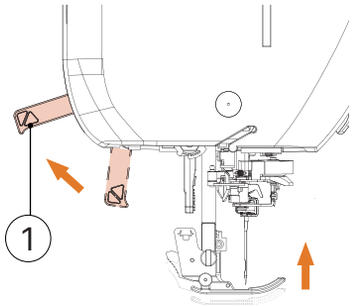

1. Presser foot lever

The upper thread guide opens, allowing the machine to be threaded.

Caution

· If the presser foot is not raised, the machine cannot be threaded.

C. Tap the "Needle Position Button" once or twice to raise the needle.

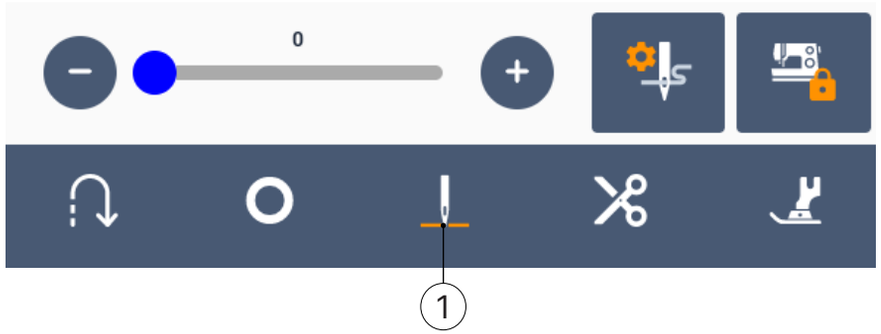

1. Needle Position Button

D. Remove the spool cap from the spool pin.

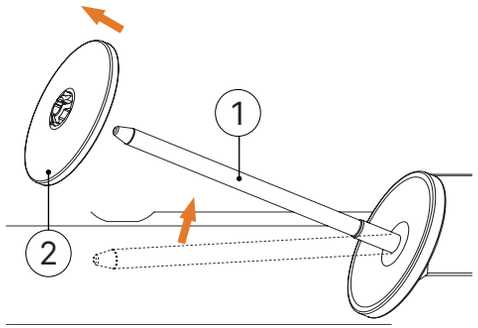

1. Spool pin
2. Spool cap

E. Place the spool on the spool pin.

Slide the spool onto the pin so that the spool sits horizontally and the thread comes off from the bottom toward the front.

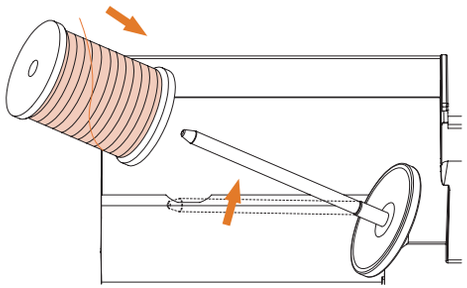

Caution

· If the spool or spool cap is not placed correctly, the thread may tangle around the spool pin or cause needle breakage.

F. Slide the spool cap onto the spool pin.

Slide the spool cap as far to the right as possible, with the rounded side facing left, as shown in the image.

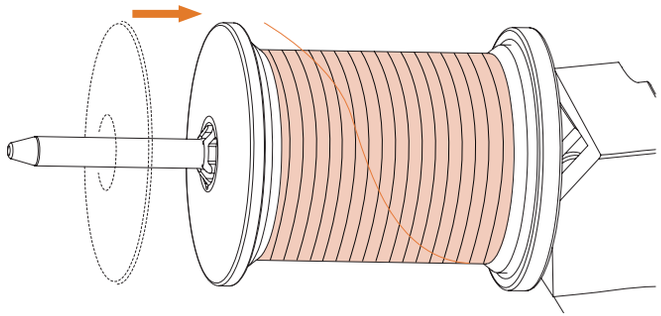

G. While gently holding the thread near the spool with your right hand, pull the thread out with your left hand, then pass the thread from behind to the front of the thread guide cover.

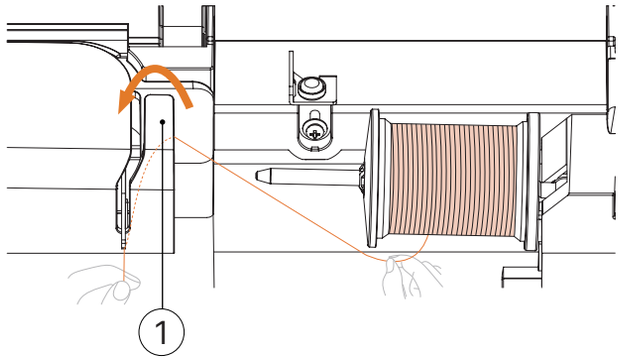

1. Thread guide cover

H. Pass the thread through the thread guide plate, then pull it upward.

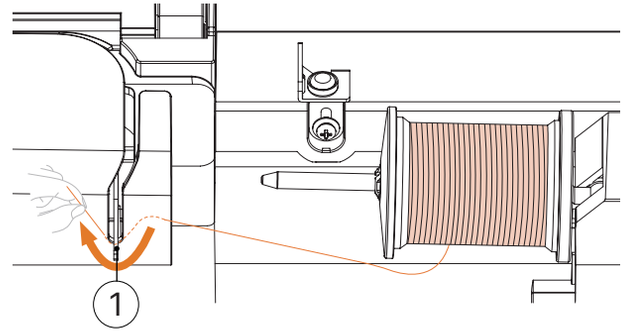

1. Thread guide plate

I. While gently holding the thread coming from under the thread guide plate with your right hand, pass the thread through the guides in the order shown in the image.

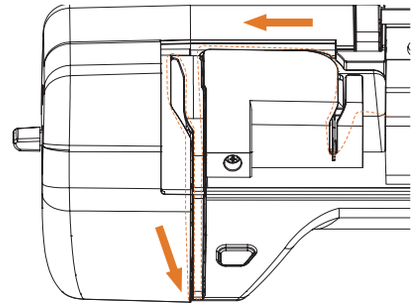

Caution

· If the presser foot is lowered and the guide is closed, the sewing machine cannot be threaded. Always raise the presser foot to open the guide before threading the machine. Also, before removing the upper thread, always raise the presser foot to open the guide.

· This sewing machine has a window that allows you to check the position of the take-up lever. Look through this window to check if the thread is correctly passing through the take-up lever.

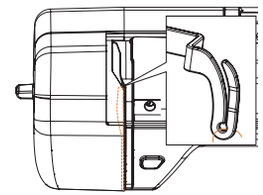

J. Tap the "Presser Foot Button" to lower the presser foot.

K. Pass the thread behind the needle bar thread guide.

As shown in the image, simply hold the thread with your left hand and feed the thread with your right hand to easily pass the thread behind the needle bar thread guide.

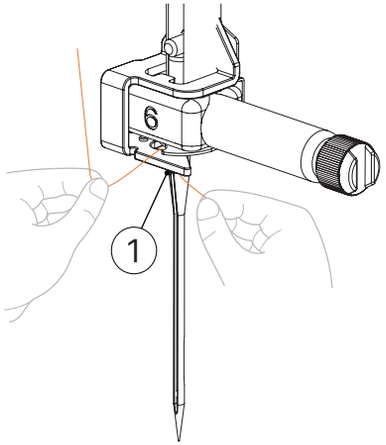

1. Needle bar thread guide

Threading

Tips

· The threader can be used for sewing machine needles sizes 75/11 to 100/16.

· Wing needles or twin needles cannot use the threader.

· The threader is not recommended when using threads such as transparent monofilament nylon or special threads.

· If the threader cannot be used, see the section "Manual Threading (Without Using the Threader)".

A. Pull the thread end that has passed through the needle bar thread guide to the left, then pass the thread through the slit "01" in the threader guide. Pull the thread firmly from the front and insert it all the way into the slot marked "7" "02" on the threader guide disk.

·Ensure the thread passes through the slit in the threader guide.

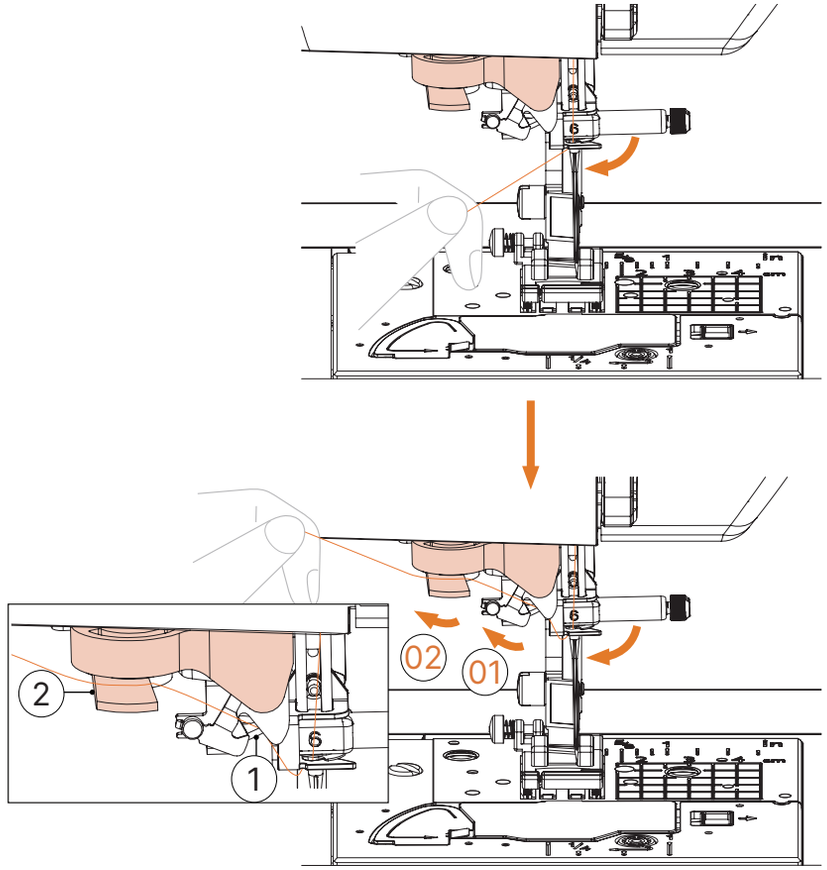

1. Slit in threader guide

2. Threader guide disk

B. Use the thread cutter on the left side of the sewing machine to cut the thread.

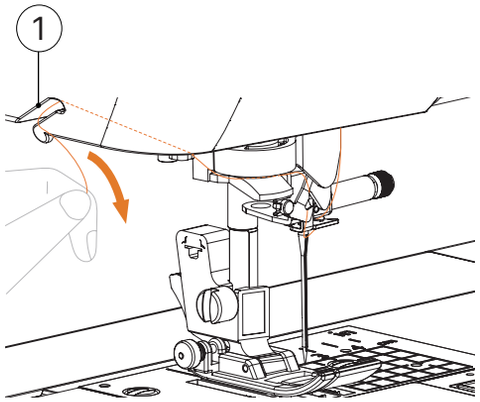

1. Thread cutter

Caution

· If the thread has been passed through and cannot be cut properly, lower the presser foot lever to secure the thread in place before cutting. If you do this, skip step C.

· When using easily frayed threads such as metallic thread, it may be difficult to thread the needle if the thread is cut. Therefore, do not use the thread cutter; after passing the thread through the threader guide disk (marked "7"), pull out about 80 mm.

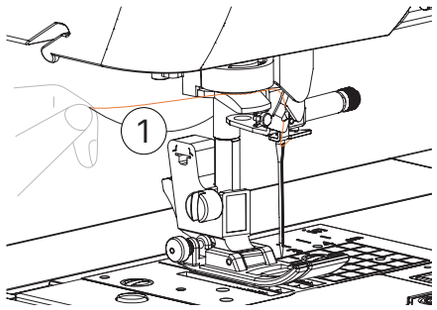

1. 80 mm / 3.15 inches or more

C. Lower the presser foot lever to lower the presser foot.

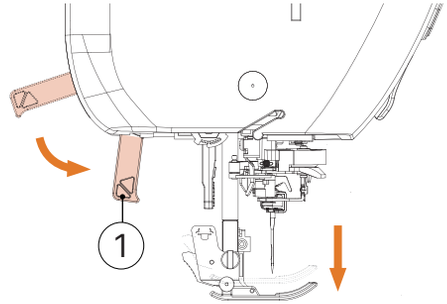

1. Presser foot lever

D. Lower the threader lever on the left side of the sewing machine until you hear a click, then slowly return the lever to its original position.

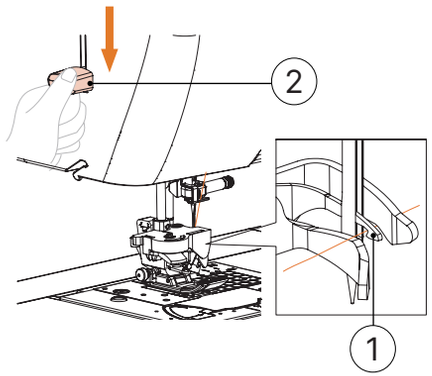

1. Thread hook
2. Threader lever

The thread hook rotates and passes the thread through the needle eye.

Caution

· If the needle is not raised to its highest position, the threader cannot thread the needle.

E. Be careful when pulling the thread that has passed through the needle eye.

If the thread does not pass through completely and forms a loop in the needle eye, carefully pull the loop out of the needle eye to pull out the thread end.

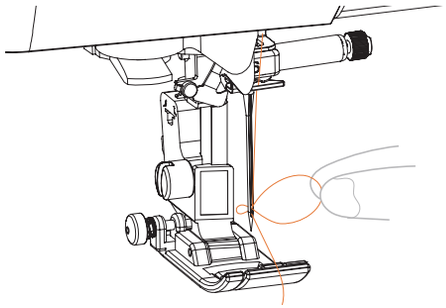

Caution

· Do not pull the thread too forcefully when pulling it out, as this may cause needle breakage or bending.

F. Raise the presser foot lever, bring the thread end out from under the presser foot, then pull the thread out about 5 cm / 1.97 in toward the rear of the sewing machine.

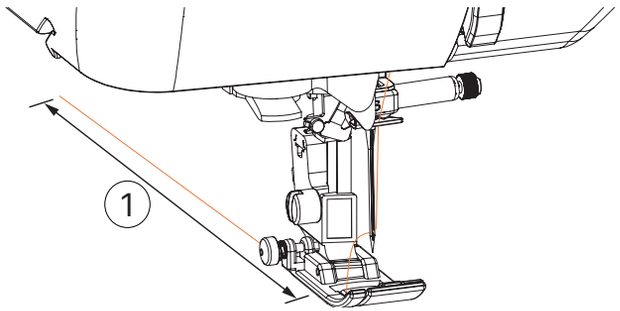

1. Approximately 5 cm / 1.97 inches

Manual Threading (Without Using the Threader)

Follow the instructions below to thread the needle when the threader cannot be used, such as with special threads like transparent nylon, wing needles, or twin needles.

A. Pass the thread through the needle bar thread guide on the sewing machine.

· For details, see the section "Upper Threading".

B. Pass the thread from the front to the back through the needle eye.

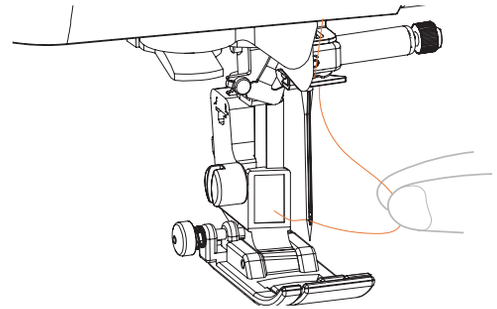

C. Raise the presser foot lever, bring the thread end out from under the presser foot, then pull the thread out about 5 cm toward the rear of the sewing machine.

Pulling Up the Bobbin Thread

Before gathering or free-motion quilting, first pull up the bobbin thread according to the instructions below.

A. Refer to the section "Upper Threading" to thread the upper thread through the machine and the needle.

B. Insert the bobbin into the inner hook as described in the section "Installing the Bobbin".

C. Pass the bobbin thread through the thread guide channel.

Do not cut the thread with the thread cutter.

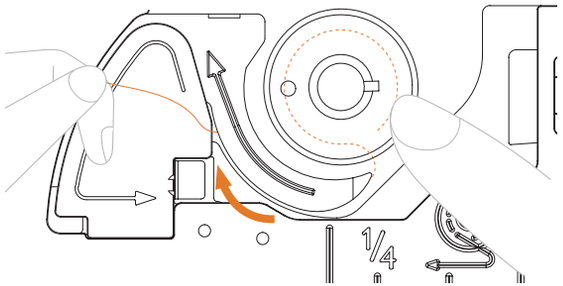

D. Gently hold the upper thread with your left hand and tap "Needle Position Button" twice to raise the needle.

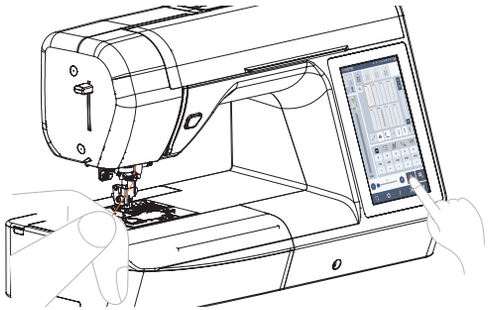

· The bobbin thread wraps around the upper thread and can be pulled up.

E. Carefully pull the upper thread upward to pull out the end of the bobbin thread.

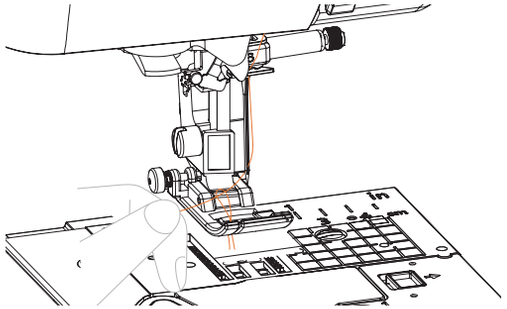

F. Pull the bobbin thread up, then pull the end about 10 cm toward the rear of the machine from under the presser foot.

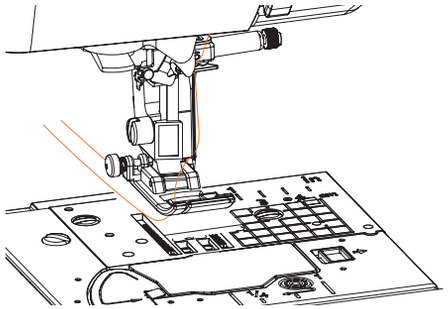

G. Replace the bobbin case cover.

Insert the protrusion at the lower-left corner of the bobbin case cover, then gently press down on the right side.

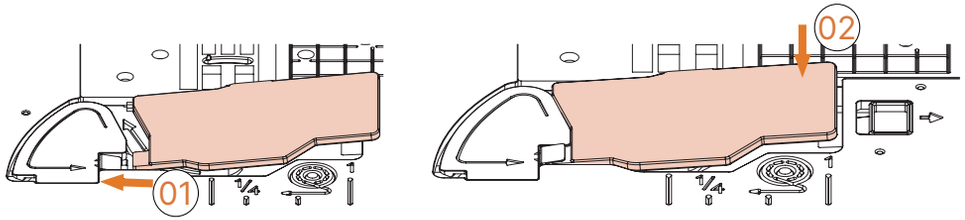

Using Twin Needles

When using a twin needle, you can sew two parallel lines of the same stitch using two different threads. Both upper threads should be of the same thickness and quality.

For detailed information on which stitches can be sewn with a twin needle, see the section "Stitch Setting Table".

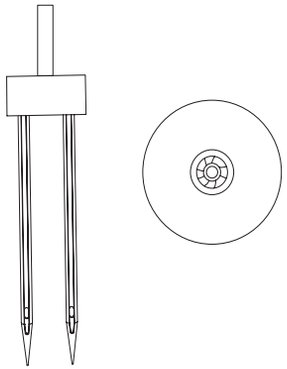

Tips

· Twin needles are also commonly used for creating pintucks.

Caution

· Never use a bent needle. Bent needles break easily and may cause injury.

· The threader cannot be used with twin needles. If the threader is used on a twin needle, the sewing machine may be damaged.

A. Install the twin needle.

· For detailed information on installing the needle, see the section "Replacing the Needle".

B. Thread the upper thread for the left needle.

· For details, follow the steps in "Upper Threading".

C. Manually thread the left needle using the upper thread.

· Pass the thread from the front to the back through the needle eye.

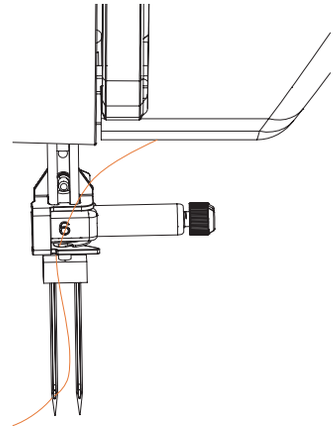

D. To thread the right needle, prepare an external thread stand in advance. Place the spool in the stand and pass the thread through it.

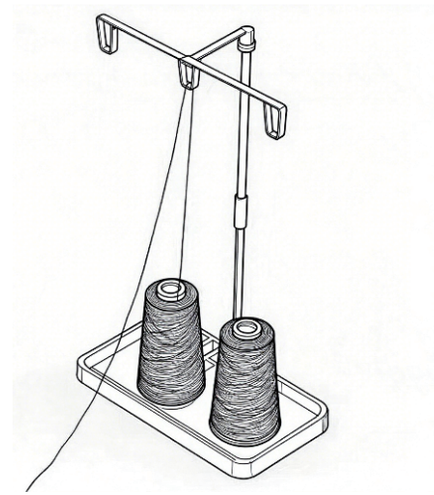

E. Perform upper threading for the right needle in the same manner as for the left side.

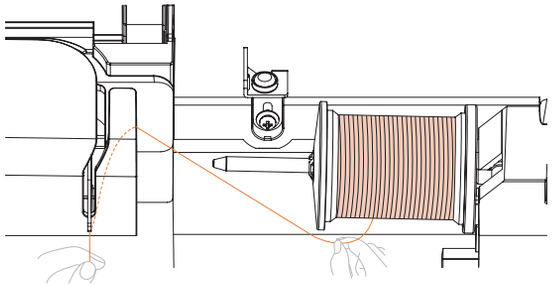

F. Without passing the thread through the needle bar thread guide, manually thread the right needle.

· Pass the thread from the front to the back through the needle eye.

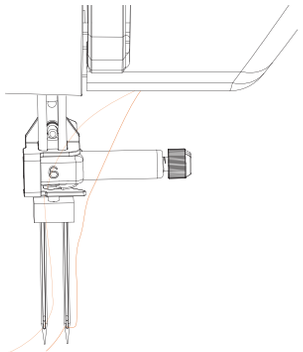

· Twin needles cannot use the threader. If the threader is used on a twin needle, the sewing machine may be damaged.

G. For details on changing the presser foot, see the section "Changing the Presser Foot".

Caution

· When using a twin needle, always install Zigzag Foot "J". If the stitches pucker, use Presser Foot "N" or attach stabilizer.

H. Turn on the sewing machine and select a stitch.

· For stitch selection, see the section "Sewing Stitches".

· For stitches usable with a twin needle, see the section "Stitch Setting Table".

Caution

· When using a twin needle, always select an appropriate stitch; otherwise, it may cause needle breakage or damage the sewing machine.

Tap on the sewing home page.

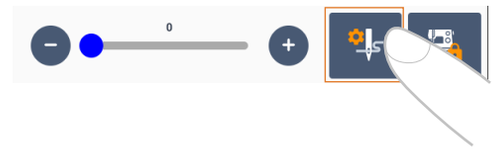

J. Set "Twin Needle" to "ON".

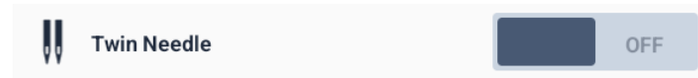

K. Return to the home page or tap directly on the home page to switch to twin needle mode.

Caution

· When using a twin needle, always set the twin needle settings; otherwise, it may cause needle breakage or damage the sewing machine.

L. Start Sewing

· For detailed information on starting to sew, see the section "Starting to Sew".

· The two lines of the stitch are sewn in parallel.

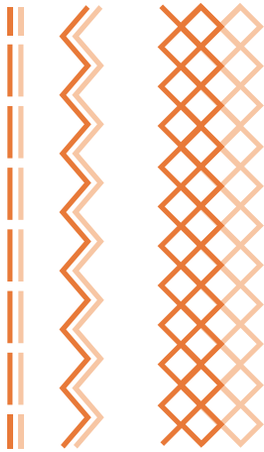

Tips

· When changing sewing direction, first tap "Needle Position Button" to raise the needle from the fabric, then raise the presser foot lever and turn the fabric.

Caution

· Do not attempt to turn the fabric while the twin needle is under the fabric, as this may cause needle breakage or damage the sewing machine.

Chapter 6 Replacing the Needle

Always observe the following Cautions regarding needle handling. Not following these Cautions is very dangerous, as it may cause needle breakage or damage the sewing machine. Please read and strictly adhere to the instructions below.

Caution

· Use only recommended household sewing machine needles. Using needles of other specifications may cause needle breakage or damage the sewing machine.

· Never use a bent needle. Bent needles break easily and may cause injury.

Fabric / Thread / Needle Combination

The sewing machine needle to use depends on the thickness of the fabric and the thread. Refer to the table below to select the appropriate thread and needle for the fabric you are sewing.

Fabric Type / Application		Wire		Needle Size
		Thickness	Type	
Medium-Weight Fabric	Wide Fabric	Cotton Thread	60 – 90	75 / 11 – 90 / 14
	Brocade	Synthetic Thread		
	Flannel, Woolen Fabric	Silk Thread	50	
Light-Weight Fabric	Fine Cotton	Cotton Thread	60 – 90	65 / 9 – 75 / 11
	Organdy	Synthetic Thread		
	Fine Plain Knit, Satin Fabric	Silk Thread	50	
Heavy-Weight Fabric	Cotton Fabric	Cotton Thread	30	100 / 16
			50	90 / 14 – 100 / 16
	Corduroy	Synthetic Thread	50 – 60	
	Tweed	Silk Thread		
Stretch Fabric	Flat Knit	Knitting Thread	50 – 60	Ballpoint needle 75/11 – 90/14 (gold)
	Warp Knit			
Abrasion-Prone Fabric		Cotton Thread	50 – 90	65 / 9 – 90 / 14
		Synthetic Thread		
		Silk Thread	50	
For Stitching Lines		Synthetic Thread	30	100 / 16
		Silk Thread	50 – 90	90 / 11 – 90 / 14

Tips

· Do not use thread size 20 or smaller. This may cause machine malfunction.

· Thread and Needle Numbering

A smaller thread number indicates a thicker thread. A larger needle number indicates a thicker needle.

· Ball Point Needle (Gold)

To prevent skipped stitches when sewing stretch fabrics, use a ball point needle (75/11 – 90/14).

· Transparent Nylon Thread

Regardless of the fabric or thread type, always use a needle size 90/14 to 100/16.

· Embroidery Needle

Use a household sewing machine needle size 75/11 for embroidery. When embroidering on heavy fabrics such as denim, use a household sewing machine needle size 90/14 or 100/16.

Caution

· The table above shows suitable fabric, thread, and needle combinations. If the combination is incorrect—particularly when using fine needles (e.g., sizes 65 / 9 to 75 /11) on thick fabrics (e.g., denim)—the needle may bend or break. Additionally, stitches may become uneven, pucker, or skip.

Checking Needle Condition

Sewing with a bent needle is very dangerous because the needle may break while operating the sewing machine. Before using a needle, place the flat side of the needle on a flat surface and check if the distance between the needle and the surface is even.

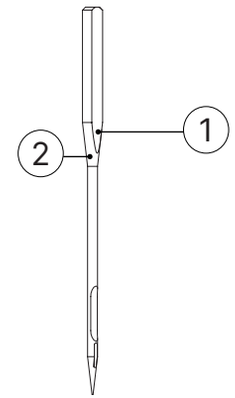

1. Flat side
2. Needle type marking

Caution

· If the distance between the needle and the surface is not even, the needle is bent. Do not use a bent needle.

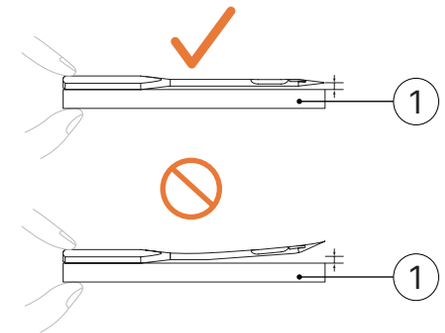

1. Flat surface

Replacing the Needle

Use a screwdriver and a needle confirmed to be straight according to the instructions in "Checking Needle Condition."

A. First, tap "Needle Position Button" once or twice to raise the needle.

B. Raise the presser foot, place a piece of fabric or paper under the presser foot to cover the hole in the needle plate, then lower the presser foot.

Caution

·Before replacing the needle, cover the hole in the needle plate with fabric or paper to prevent the needle from falling into the machine.

C. Tap

· All keys and operation buttons will be locked (except).

D. Hold the needle with your left hand, then use a flat-head screwdriver to turn the needle clamp screw toward yourself (counterclockwise) to remove the needle.

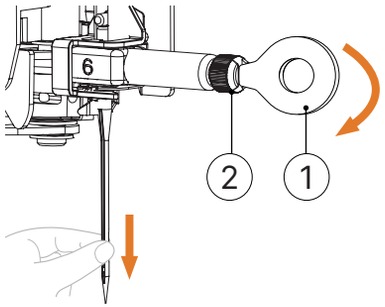

1. Flat-head screwdriver
2. Needle clamp screw

· When loosening or tightening the needle clamp screw, do not apply excessive force, as this may damage parts of the sewing machine.

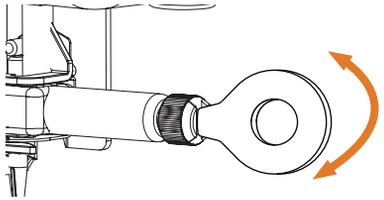

E. With the flat side of the needle facing the back of the sewing machine, insert the needle until it touches the needle stop.

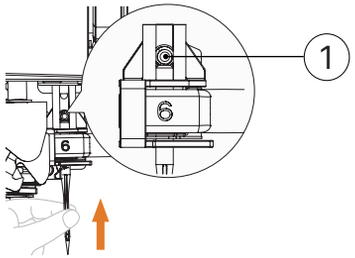

1. Needle stop

F. Hold the needle with your left hand, then use the screwdriver to tighten the needle clamp screw by turning it clockwise.

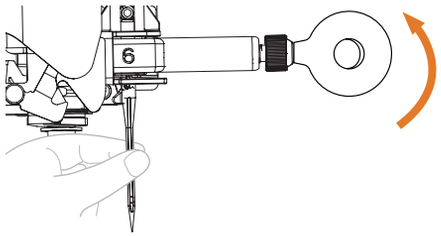

Caution

· When inserting the needle, always insert it until it touches the needle stop and tighten the needle clamp screw with the screwdriver. Otherwise, the needle may break or cause injury.

G. Tap to unlock all keys and buttons.

Chapter 7 Presser Foot

Changing the Presser Foot

Caution

· Use a presser foot suitable for the type of stitch being sewn; otherwise, the needle may hit the presser foot, causing bending or breakage.

· Use only presser feet designed specifically for this sewing machine. Using other presser feet may cause personal injury or damage the sewing machine.

A. First, tap "Needle Position Button" once or twice to raise the needle.

B. Tap

· All keys and operation buttons will be locked (except).

C. Raise the presser foot lever.

D. Press the black button at the back of the presser foot holder to remove the presser foot.

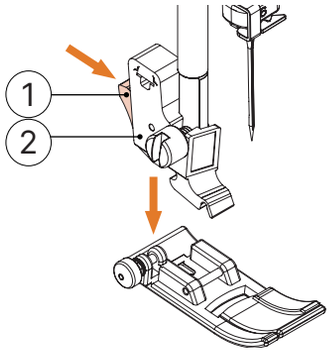

1. Black button
2. Presser foot holder

E. Place the new presser foot under the holder, aligning the presser foot shaft with the groove in the holder.

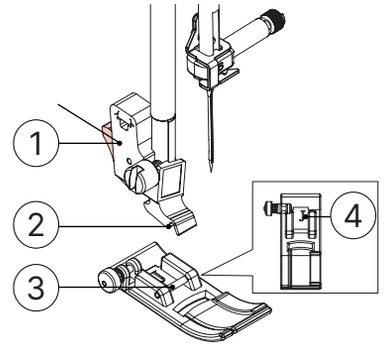

1. Presser foot holder
2. Groove
3. Presser foot shaft
4. Presser foot type

E. Slowly lower the presser foot lever so that the presser foot shaft clicks into the groove of the presser foot holder.

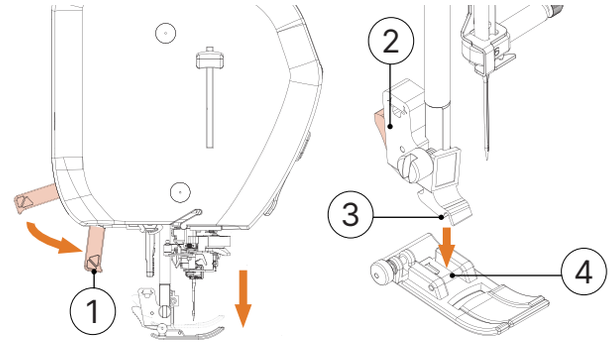

1. Presser foot lever
2. Presser foot holder
3. Groove
4. Presser foot shaft

→ The presser foot is attached.

F. Raise the presser foot lever to check if the presser foot is securely attached.

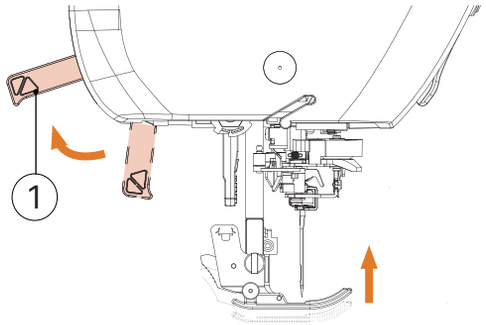

1. Presser foot lever

G. Tap to unlock all keys and buttons.

Tips

When selecting a stitch, the icon for the presser foot that should be used appears on the screen. Before starting to sew, check that the correct presser foot is installed.

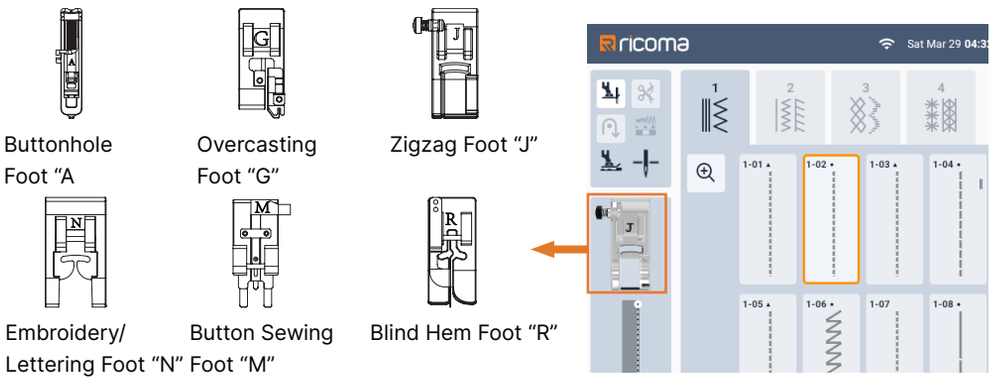

· See the "Stitch Setting Chart" section for the presser foot to use with the selected stitch.

Removing the Presser Foot Holder

Remove the presser foot holder when cleaning the sewing machine or installing presser feet that do not use the holder, such as the even feed foot and quilting foot. Use a screwdriver to remove the presser foot holder.

A. Remove the presser foot.

· For details, see the section "Changing the Presser Foot".

B. Loosen the presser foot holder screw with a screwdriver.

· Turn the screw toward the back of the sewing machine (counterclockwise).

· Use a flat-head screwdriver to loosen or tighten the presser foot holder screw.

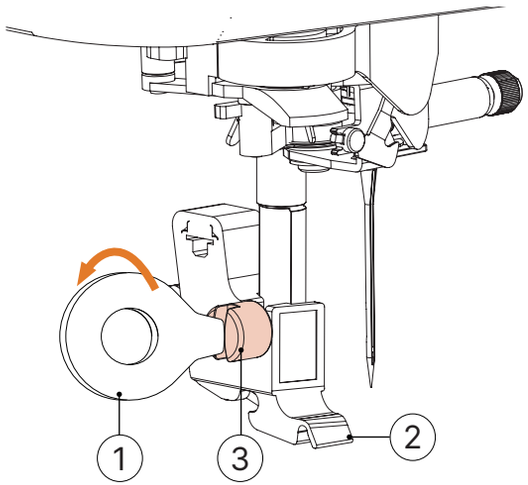

1. Flat-head screwdriver
2. Presser foot holder
3. Presser foot holder screw

Installing the Presser Foot Holder

A. Raise the presser foot lever.

B. Align the presser foot holder with the lower left side of the presser foot lever.

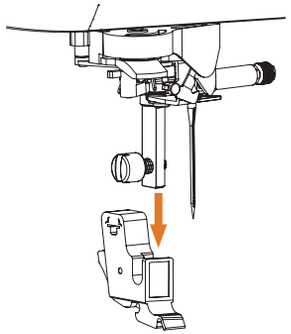

C. Hold the presser foot holder with your right hand and use a screwdriver with your left hand to tighten the screw.

·Turn the screw toward yourself (clockwise).

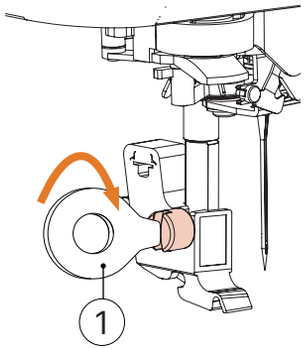

1. Flat-head screwdriver

Caution

· Always tighten the presser foot holder screw securely; otherwise, the presser foot holder may fall off and the needle may hit it, causing bending or breakage.

Tips

· If the presser foot holder is not installed correctly, the thread tension will be incorrect.

Chapter 8 Starting to Sew

Caution

· When operating the machine, pay special attention to the needle position. Also, be careful not to let your hands come near any moving parts, such as the needle and handwheel, as this may result in injury.

· Do not forcefully pull or push the fabric while sewing, as this may result in injury or needle breakage.

· Never use a bent needle. Bent needles can easily break and may cause injury.

· Be careful not to let the needle strike pins, as this may cause the needle to bend or break.

Stitch Types

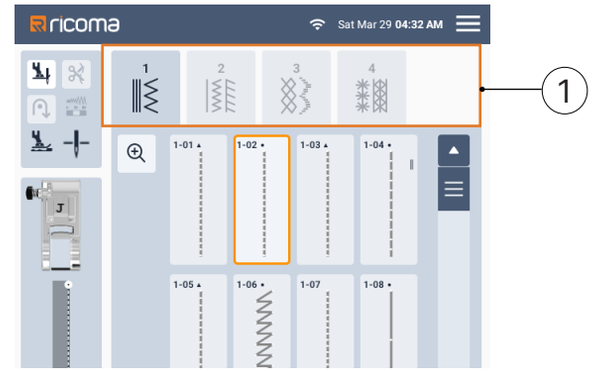

1. Utility stitches: Can be selected from the utility stitches, including straight stitches, overcasting, and buttonholes. For detailed information on various stitches, refer to the "Stitch Setting Chart."

· For detailed sewing instructions, refer to the "Decorative Sewing" section.

Sewing Stitches

A. Turn on the main power, then tap the " Needle Position Button " to raise the needle.

· The screen will be displayed.

If sewing any stitch in the category, proceed to step D.

B. Tap on the operation panel.

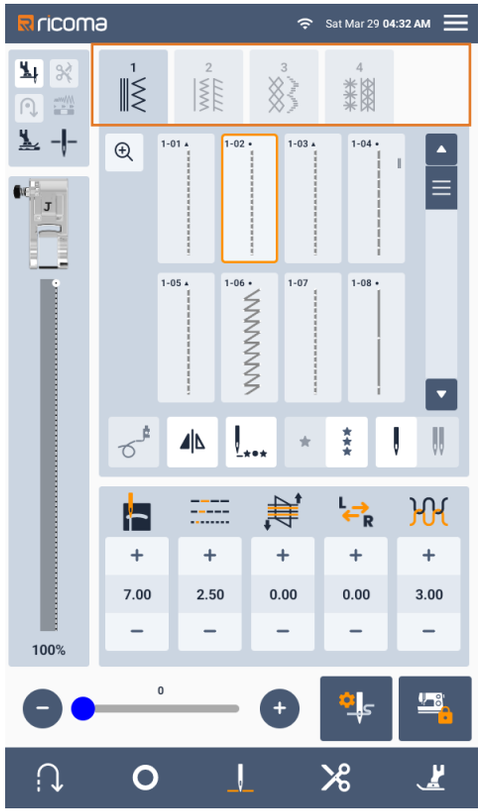

C. Select the stitch type.

D. Press stitch selection.

Displays the previous screen.

Displays the next screen.

swipe up / down to select.

· For detailed information on key functions, refer to the "Viewing the LCD" section.

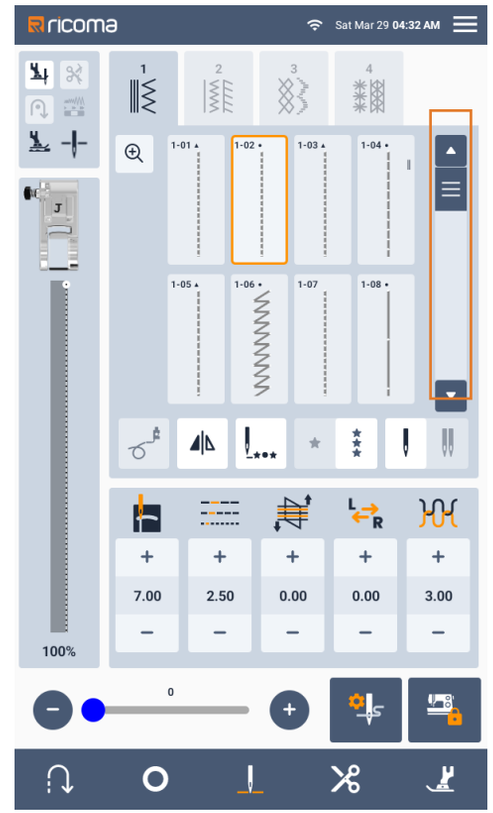

E. If necessary, specify the automatic reverse/reinforcement stitch settings and adjust the stitch length, etc.

· For detailed information on adjusting stitch width and length, refer to "Setting the Stitch Width" and "Setting the Stitch Length."

Tips

· When selecting a stitch, the required presser foot icon will appear on the screen. Before starting sewing, check that the correct presser foot is installed.

F. Install the presser foot.

· For detailed information on changing the presser foot, refer to "Replacing the Presser Foot."

Caution

· Always use the correct presser foot. If the wrong presser foot is used, the needle may strike the presser foot, causing needle breakage or bending, which could result in injury.

G. Place the fabric under the presser foot. Hold the fabric and thread with your left hand, then turn the handwheel counterclockwise or tap the " Needle Position Button" to position the needle at the starting point of sewing.

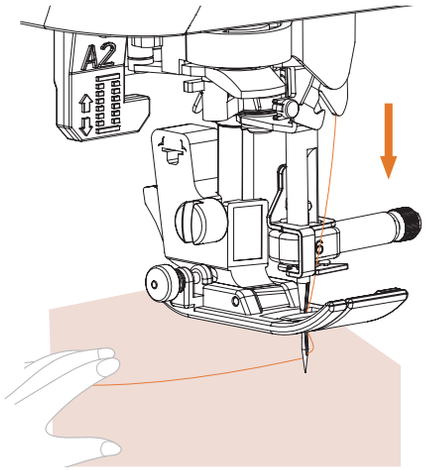

Tips

· Press the black button on the left side of presser foot "J" only when the fabric does not feed or when sewing thick seams.

H. Lower the presser foot.

There is no need to pull up the bobbin thread.

I. Use the sewing speed controller to adjust the maximum sewing speed.

You can adjust the sewing speed using this controller during sewing.

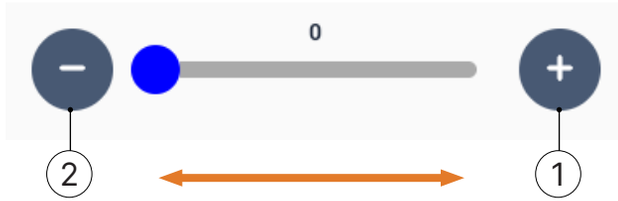

1. Fast
2. Slow

J. Press the " Start/Stop " button to begin sewing.

Gently guide the fabric with your hands.

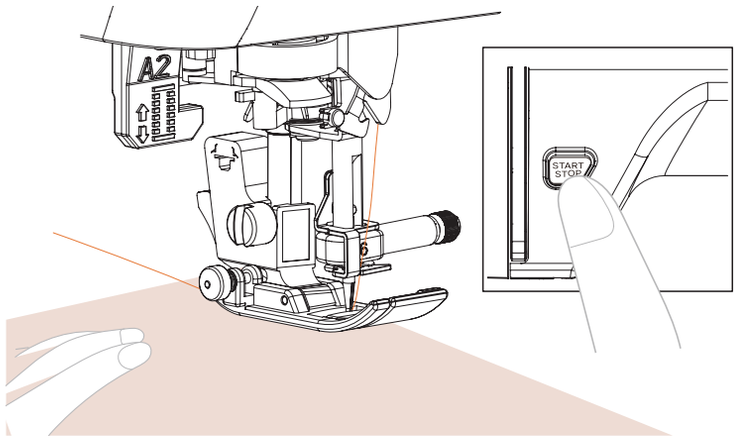

Tips

· When using the foot controller, sewing cannot be started by pressing the " Start / Stop " button.

K. Press the " Start / Stop " button again to stop sewing.

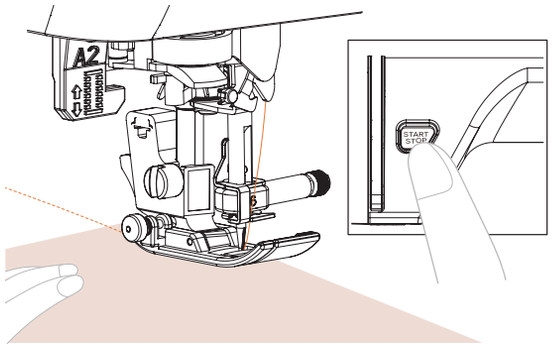

L. Tap the " Thread Cutter Button " to trim the upper thread and bobbin thread.

1. Thread cutter button

→ The needle will automatically return to the up position.

Caution

· Do not tap the " Thread Cutter Button " after the thread has been cut. Otherwise, thread tangling, needle breakage, or damage to the machine may occur.

· Do not tap the " Thread Cutter Button " when there is no fabric in the machine or while the machine is running. The thread may become tangled, leading to damage.

Tips

· When cutting nylon monofilament thread or other decorative threads, use the thread cutter on the side of the sewing machine.

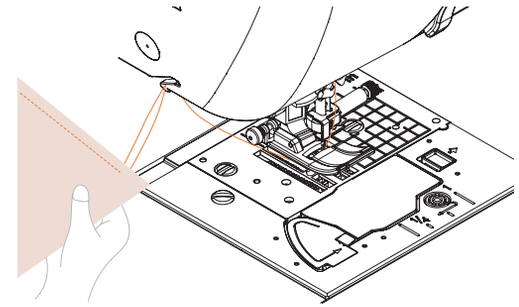

M. When the needle stops moving, raise the presser foot and remove the fabric.

Tips

· This sewing machine is equipped with a bobbin thread sensor. The machine will warn you and stop when the bobbin thread is about to run out.

Using the Foot Controller

You can also start and stop sewing using the foot controller.

Caution

· Do not allow fabric offcuts and dust to accumulate on the foot controller. Otherwise, it may cause a fire or electric shock.

Tips

· When using the foot controller, sewing cannot be started by pressing the " Start / Stop " button.

· The foot controller cannot be used during embroidery.

A. Insert the foot controller plug into the jack on the sewing machine.

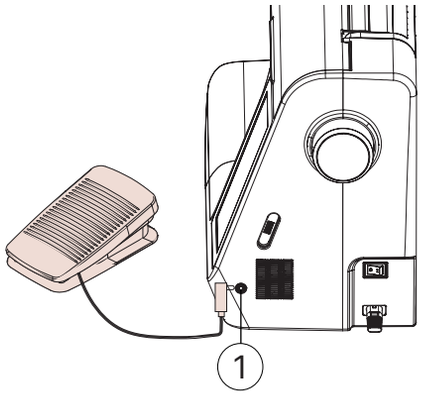

1. Foot controller jack

B. Turn on the machine.

C. Slowly depress the foot controller to start sewing.

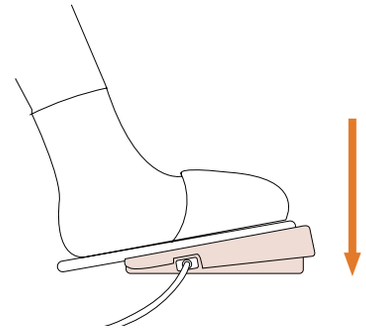

Tips

· The speed set with the sewing speed controller is the maximum sewing speed for the foot controller.

D. Release the foot controller to stop the machine.

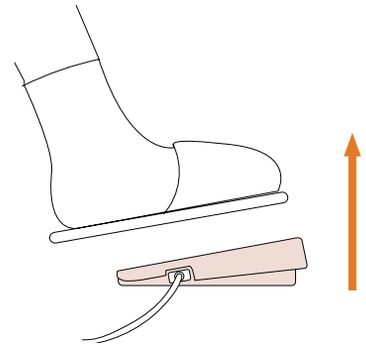

Sewing Reinforcement Stitches

Reverse / Reinforcement stitches are usually needed at the beginning and end of sewing. You can sew reverse/reinforcement stitches using the " Reverse Stitch Button " . Refer to the "Stitch Setting Chart" under the "Reverse/ Reinforcement Stitch" column. When you tap the " Reinforcement Stitch Button ", the machine will sew 3 to 5 reinforcement stitches at that position and then stop.

1. Reverse stitch
2. Reinforcement stitch

If the automatic reinforcement function is turned on, when the "Start / Stop" button is pressed, a reverse stitch (or reinforcement stitch) will be sewn automatically at the beginning of sewing. Tap the "Reverse Stitch Button " or "Reinforcement Stitch Button" to automatically sew reverse or reinforcement stitches at the end of sewing.

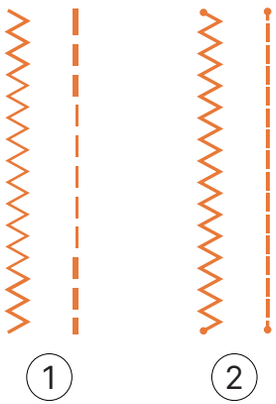

1. Reverse stitch
2. Reinforcement stitch

The action performed when tapping the button varies depending on the selected pattern. Refer to the table in "Automatic Reinforcement Stitch."

Automatic Reinforcement Stitch

After selecting a stitch pattern, turn on the automatic reinforcement function before sewing, and the machine will automatically sew reinforcement stitches (or reverse stitches, depending on the stitch pattern) at the beginning of sewing. Refer to the table in "Automatic Reinforcement Stitch."

A. Tap to open the sewing settings.

B. Turn on the automatic reinforcement function; the icon in the status display area highlights.

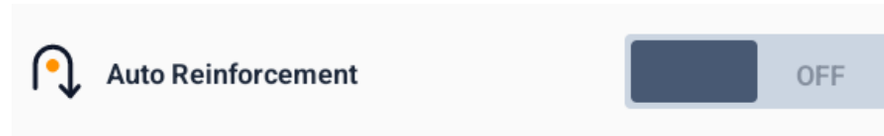

Off status

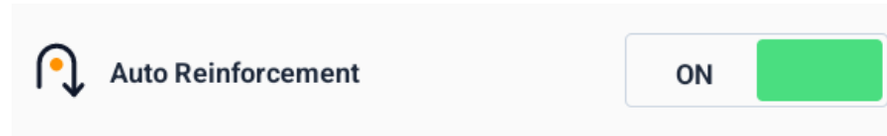

On status

C. Return to the home screen.

D. Place the fabric at the starting position and begin sewing.

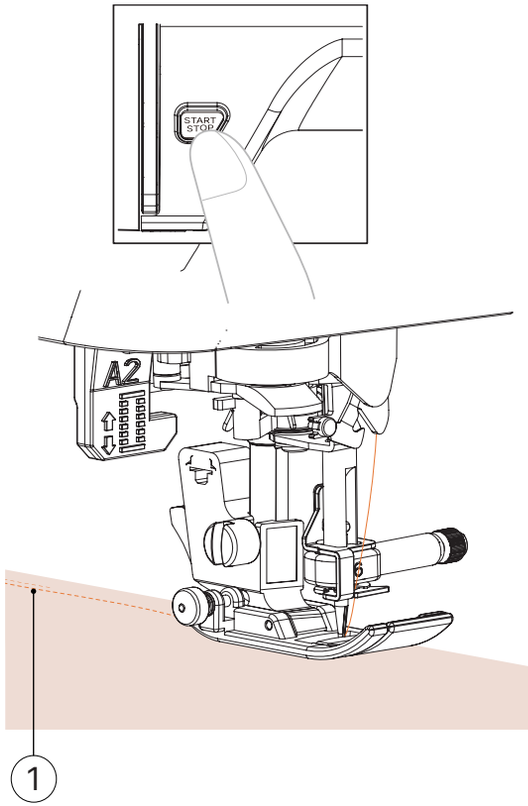

1. Reverse stitch (or reinforcement stitch)

→ The machine will automatically sew reverse stitches (or reinforcement stitches) and then continue sewing.

Tips

· If sewing is paused by pressing the "Start / Stop" button, pressing the button again will resume sewing. The machine will not sew reverse / reinforcement stitches again.

E. Tap the "Reverse Stitch Button" or "Reinforcement Stitch Button".

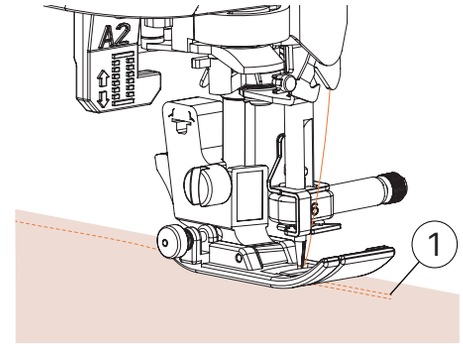

1. Reverse stitch (or reinforcement stitch)

→ The machine will sew reverse stitches (or reinforcement stitches) and then stop.

Tips

· To turn off the automatic reinforcement stitch function, tap again so that it appears as

The action performed when tapping the button varies depending on the selected pattern. Refer to the table below for details on the actions performed when tapping the buttons.

Automatic Reinforcement Type (Corresponds To "Stitch Setting Chart - Automatic Reinforcement Type" On Page 68)	**On / Off For Automatic Thread Cutting Function**	**Reverse Stitch Button**	**Reinforcement Stitch Button**
Reverse	Off	1. When Sewing Starts, Reverse Stitches Are Sewn Automatically. 2. When The Reverse Stitch Button Is Tapped, Reverse Stitches Are Sewn Automatically, And The Machine Stops After Completion. 3. When The Machine Is Started Again, It Will Sew Directly Without Triggering Automatic Reverse Or Reinforcement Stitches. 4. The Automatic Reinforcement Program Will Not Reset Until The Thread Cutting Function Is Triggered.	1. When Sewing Starts, Reverse Stitches Are Sewn Automatically. 2. When The Reinforcement Stitch Button Is Tapped, Reinforcement Stitches Are Sewn Automatically, And The Machine Stops After Completion. 3. When The Machine Is Started Again, It Will Sew Directly Without Triggering Automatic Reverse Or Reinforcement Stitches. 4. The Automatic Reinforcement Program Will Not Reset Until The Thread Cutting Function Is Triggered.
Reverse	On	1. When Sewing Starts, Reverse Stitches Are Sewn Automatically. 2. When The Reverse Stitch Button Is Tapped, Reverse Stitches Are Sewn Automatically. After Completion, The Thread Cutting Function Is Triggered Once, The Machine Stops, And The Automatic Reinforcement Program Resets.	1. When Sewing Starts, Reverse Stitches Are Sewn Automatically. 2. When The Reinforcement Stitch Button Is Tapped, Reinforcement Stitches Are Sewn Automatically. After Completion, The Thread Cutting Function Is Triggered Once, The Machine Stops, And The Automatic Reinforcement Program Resets.
Reinforcement	Off	1.When Sewing Starts, Reinforcement Stitches Are Sewn Automatically. 2. When The Reverse Stitch Button Is Tapped, Reinforcement Stitches Are Sewn Automatically, And The Machine Stops After Completion. 3. When The Machine Is Started Again, It Will Sew Directly Without Triggering Automatic Reverse Or Reinforcement Stitches. 4. The Automatic Reinforcement Program Will Not Reset Until The Thread Cutting Function Is Triggered.	1. When Sewing Starts, Reinforcement Stitches Are Sewn Automatically. 2. When The Reverse Stitch Button Is Tapped, Reinforcement Stitches Are Sewn Automatically, And The Machine Stops After Completion. 3. When The Machine Is Started Again, It Will Sew Directly Without Triggering Automatic Reverse Or Reinforcement Stitches. 4. The Automatic Reinforcement Program Will Not Reset Until The Thread Cutting Function Is Triggered.

Automatic Reinforcement Type (Corresponds To "Stitch Setting Chart - Automatic Reinforcement Type" On Page 68)	**On / Off For Automatic Thread Cutting Function**	**Reverse Stitch Button**	**Reinforcement Stitch Button**
Reinforcement	On	1. When Sewing Starts, Reinforcement Stitches Are Sewn Automatically. 2. When The Reverse Stitch Button Is Tapped, Reinforcement Stitches Are Sewn Automatically. After Completion, The Thread Cutting Function Is Triggered Once, The Machine Stops, And The Automatic Reinforcement Program Resets.	1. When Sewing Starts, Reinforcement Stitches Are Sewn Automatically. 2. When The Reinforcement Stitch Button Is Tapped, Reinforcement Stitches Are Sewn Automatically. After Completion, The Thread Cutting Function Is Triggered Once, The Machine Stops, And The Automatic Reinforcement Program Resets.

* Stitch numbers ▲ marked with indicate the automatic reinforcement type is Reverse; stitch numbers ● marked with indicate the automatic reinforcement type is Reinforcement.

* The automatic reinforcement function cannot be used with series 4 buttonhole stitches.

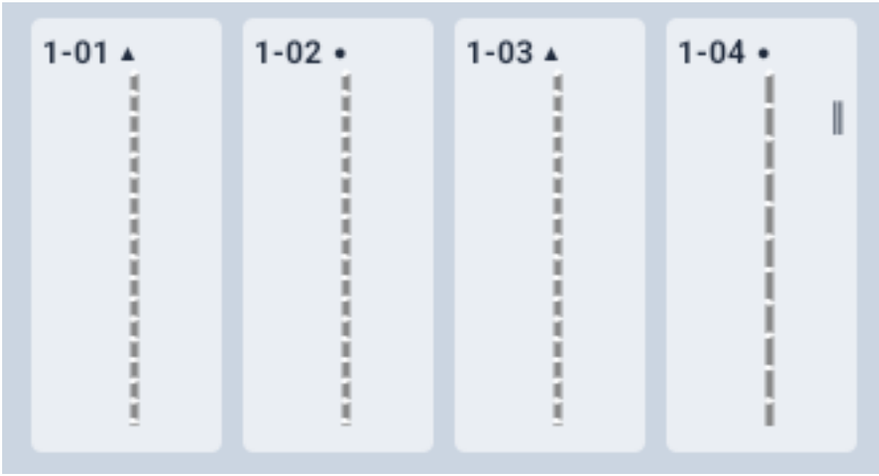

Setting Stitches

This machine is preset with default settings for stitch width, stitch length, " L / R Shift (Left / Right Shift)", and upper thread tension for each stitch.

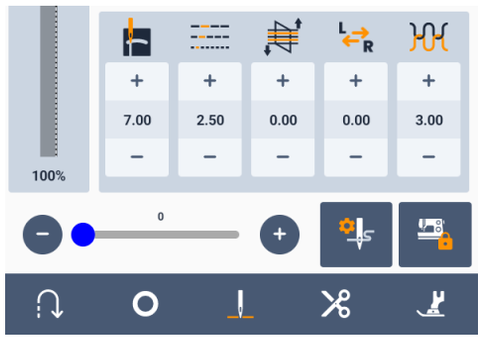

Setting the Stitch Width

You can adjust the stitch width (zigzag stitch width) to make it wider or narrower.

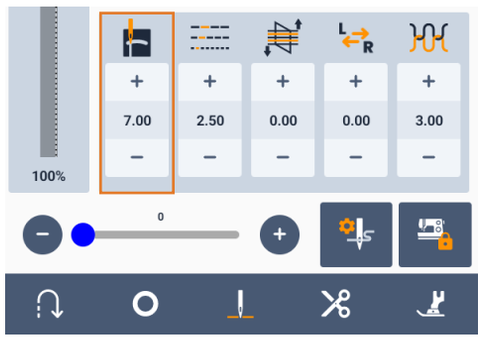

Each time you tap − , the zigzag stitch becomes narrower.

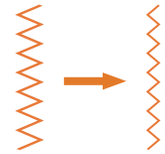

Each time you tap + , the zigzag stitch becomes wider.

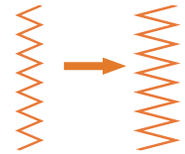

Tips

· If a straight stitch (left needle position or triple stretch stitch) is selected, changing the stitch width will change the needle position.Increasing the width moves the needle to the right; decreasing the width moves the needle to the left.

Caution

· After adjusting the stitch width, slowly turn the handwheel toward you (counterclockwise) to check if the needle hits the presser foot. If the needle hits the presser foot, it may bend or break.

Setting the Stitch Length

You can adjust the stitch length to make the stitches coarser (longer) or finer (shorter).

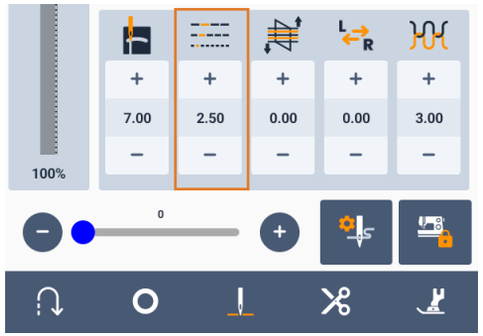

Each time you tap − , the stitch becomes finer (shorter).

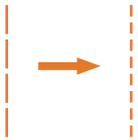

Each time you tap + , the stitch becomes longer.

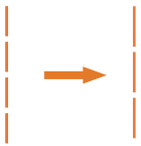

Setting "L / R Shift (Left / Right Shift)

To change the position of the zigzag stitch pattern by moving it left or right, follow the steps below.

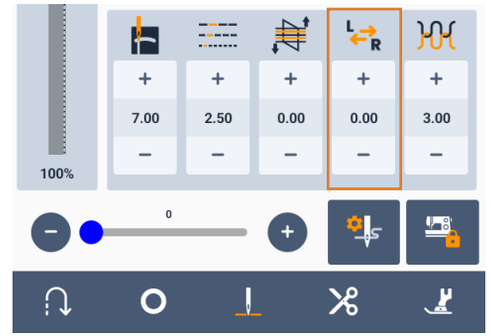

Tap − to move the pattern to the left.

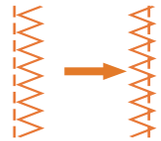

→ The value in the display will include a minus sign.

Tap + to move the pattern to the right of the left needle position.

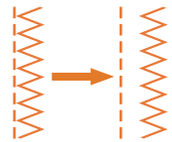

→ The value in the display will include a plus sign.

Caution

· After adjusting "L / R Shift (Left / Right Shift)", slowly turn the handwheel toward you (counterclockwise) to check if the needle hits the presser foot. If the needle hits the presser foot, it may bend or break.

· If the stitches are puckering, increase the stitch length. Continuing to sew with puckered stitches may cause the needle to bend or break.

Setting the Upper Thread Tension

Depending on the fabric and thread used, you may need to change the thread tension.

A. Correct thread tension

The upper thread and bobbin thread should cross near the middle of the fabric. Only the upper thread should be visible from the right side of the fabric, and only the bobbin thread should be visible from the wrong side of the fabric.

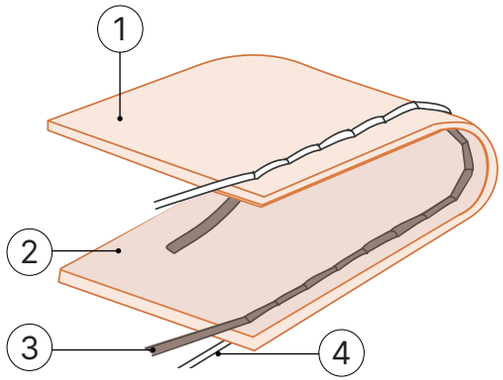

1. Wrong side of fabric
2. Right side of fabric
3. Upper thread
4. Bobbin thread

B. Upper thread too tight

If the bobbin thread is visible from the right side of the fabric, the upper thread tension is too tight.

Tips

· If the bobbin thread is not threaded correctly, the upper thread tension may become too tight. In this case, refer to "Installing the Bobbin" and re-thread the bobbin thread.

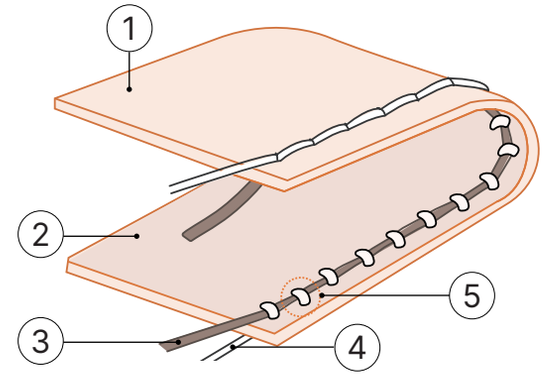

1. Wrong side of fabric
2. Right side of fabric
3. Upper thread
4. Bobbin thread
5. Bobbin thread visible from right side of fabric

Each time you tap , the upper thread tension becomes looser.

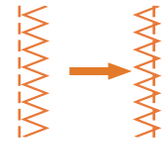

C. Upper thread too loose

If the upper thread is visible from the wrong side of the fabric, the upper thread tension is too loose.

Tips

· If the upper thread is not threaded correctly, the upper thread tension may become too loose. In this case, refer to "Threading the Upper Thread" and re-thread the upper thread.

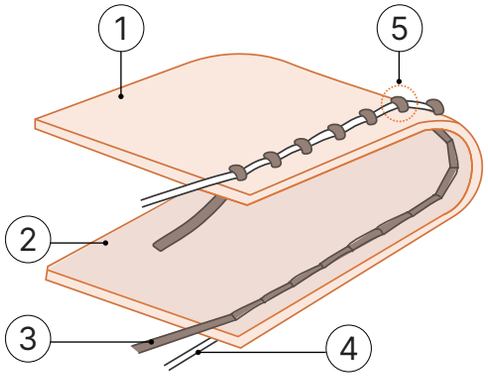

1. Wrong side of fabric
2. Right side of fabric
3. Upper thread
4. Bobbin thread
5. Upper thread visible from wrong side of fabric

Each time you tap + , the upper thread tension becomes tighter.

Tips

· If the upper thread is not wound correctly or the bobbin is not installed correctly, it will not be possible to set the correct thread tension. If you cannot achieve the correct thread tension, re-thread the upper thread and correctly insert the bobbin.

Automatic Thread Cutting

You can set the sewing machine to automatically cut the threads after sewing finishes. This is called "Programmed Thread Cutting."

A. Turn on the machine.

B. Tap to enter the sewing settings.

C. Find "Automatic Thread Cutting" and tap to turn it on.

D. Return to the home screen and check the status display area; the icon is highlighted.

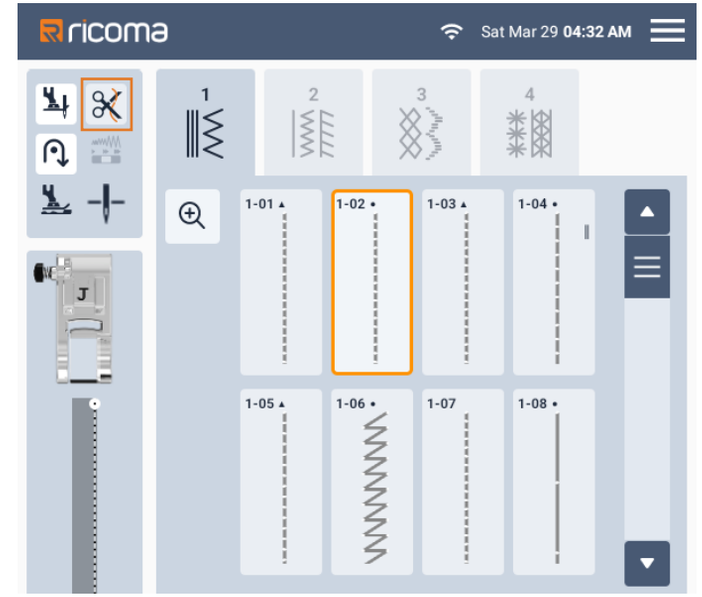

To turn off programmed thread cutting, directly tap .

E. Place the fabric in position, then press the "Start / Stop" button once.

F. Once the end of the stitching is reached, tap the "Reverse Stitch Button" or "Reinforcement Stitch Button" once.

→ When the reverse or reinforcement stitches are completed, the sewing machine stops sewing and the threads are cut.

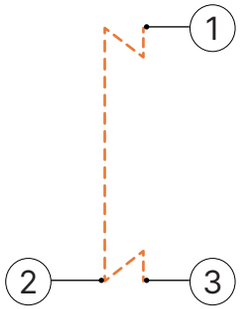

1. Position where " Start/Stop " button is pressed.

2. Position where " Reverse Stitch Button " or " Reinforcement Stitch Button " is tapped.

3. Threads are cut here.

Tips

· If the " Start / Stop " button is pressed during sewing, programmed thread cutting will not be performed.

Mirroring Stitches

You can sew horizontally mirrored stitches (left and right).

A. Turn on the machine.

B. Select the stitch.

· For detailed information on selecting stitches, refer to "Sewing Stitches."

C. Tap .

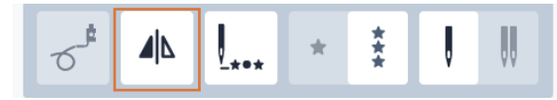

→The pattern displayed at the top of the screen will be mirrored.

· To turn off mirrored stitches, tap .

Tips

· Buttonholes and certain stitches cannot be mirrored; tapping the mirror button will have no effect.

· The mirror setting will be canceled when the sewing machine is turned off.

Adjusting Presser Foot Pressure

You can adjust the presser foot pressure (the pressure applied by the presser foot to the fabric) on the settings screen. The higher the value, the greater the pressure. The pressure for normal sewing is set to "3".

A. Tap to display the settings screen.

B. Find "Presser Foot Pressure."

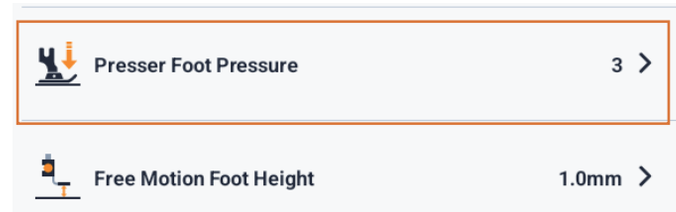

C. Tap to adjust the "Presser Foot Pressure."

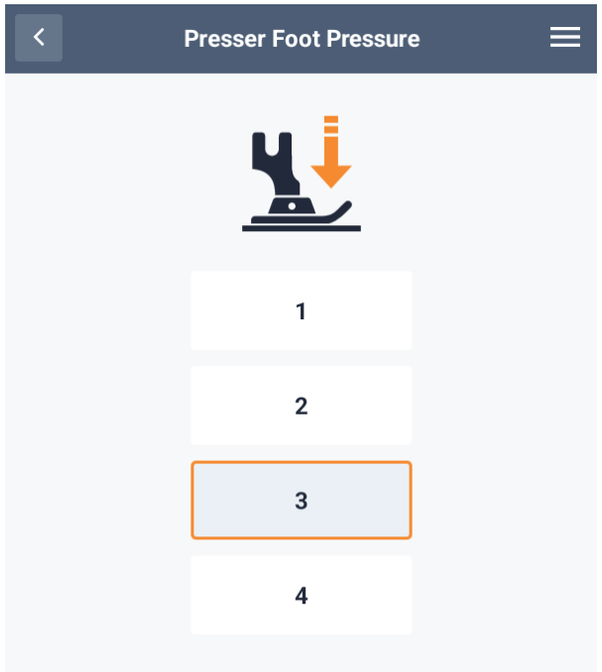

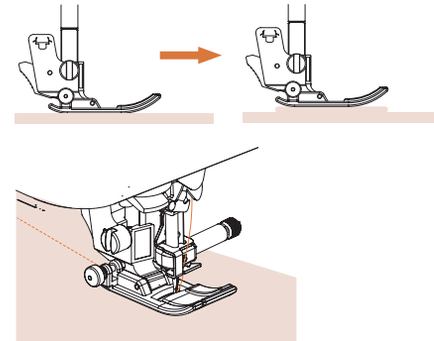

A. Tap to display the settings screen.

B. Set "Auto Fabric Sensor " to "ON".

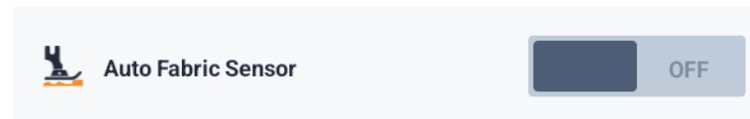

C. Tap to return to the original screen.

Automatic Fabric Sensor (Automatic Presser Foot Pressure Adjustment)

During sewing, internal sensors can automatically detect the fabric thickness and automatically adjust the presser foot pressure to ensure smooth fabric feeding. The fabric sensor system works continuously during sewing. This function can be used for sewing overly thick seams or for quilting. For details, refer to the "Sewing" section.

Pivot Function

If the pivot key is selected, when the machine stops, the needle will be lowered (into the fabric) and the presser foot will automatically be raised to a suitable height when the "Start / Stop" button is pressed. When the "Start/Stop" button is pressed again, the presser foot will automatically be lowered and sewing will continue. This function can be used to stop the machine to rotate the fabric.

Tips

· When the pivot key is selected, the presser foot height when sewing stops can be changed according to the type of fabric being sewn. Tap "Pivot Height" in the settings screen. Tap to select one of three heights (3.2 mm / 0.13 in, 5.0 mm / 0.20 in, and 7.5 mm / 0.30 in). Usually, the preferred setting is 3.2 mm / 0.13 in.

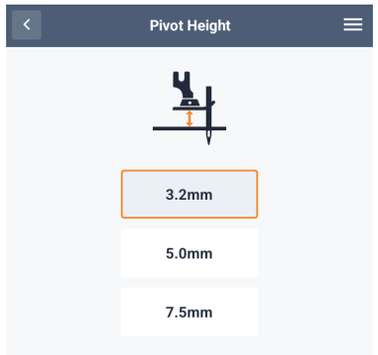

· When the pivot setting function is turned on, the needle stop position function is disabled, and the needle will default to the down position when the machine stops.

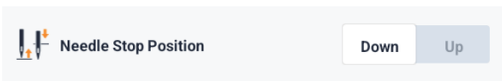

· The pivot function can only be used for stitches that display presser foot J or N in the upper left corner of the screen.

· If the pivot key is selected, the presser foot height cannot be changed.

A. Select the stitch.

B. Tap "Sewing Settings", find "Pivot Setting", and tap to turn it on.

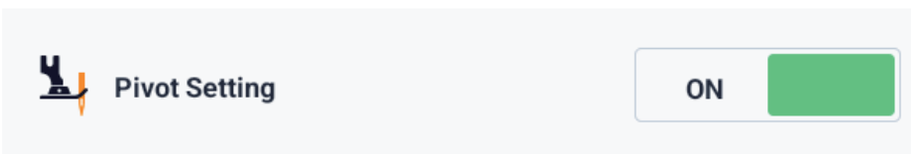

C. Return to the home screen and check the status display area; the icon is highlighted.

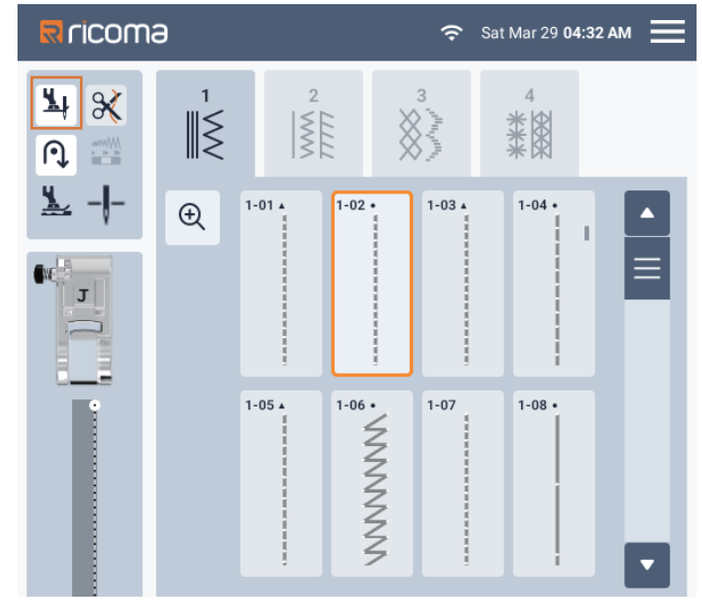

D. Place the fabric under the presser foot, position the needle at the stitch start point, lower the presser foot, and press the "Start/Stop" button. The sewing machine will start sewing.

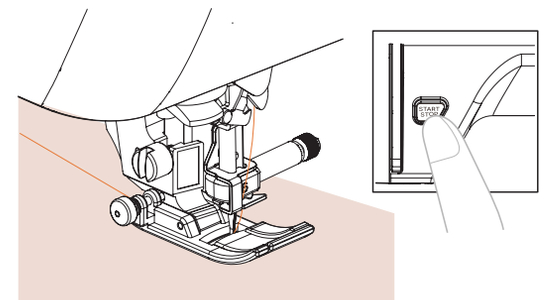

Caution

· If sewing is paused by pressing the "Start/Stop" button, pressing the button again will resume sewing. Reverse stitches (or reinforcement stitches) will not be sewn.

E. Press the "Start / Stop" button to stop the machine at the position where you want to change the sewing direction.

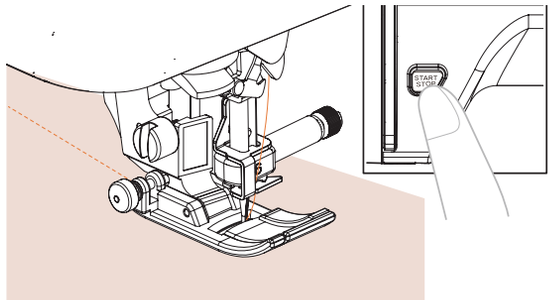

→ The sewing machine stops, the needle is in the fabric, and the presser foot automatically rises.

F. Rotate the fabric, then press the "Start / Stop" button.

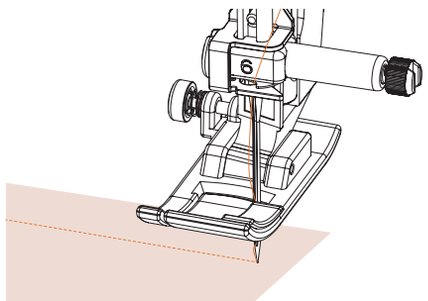

→ The presser foot automatically lowers, and sewing continues.

Sewing in Free Motion Mode

In Free Motion mode, the presser foot is raised to the height required for free-motion sewing. After starting sewing, internal sensors detect the fabric thickness, and the quilting presser foot is raised to the height specified in the machine settings screen. In this mode, the feed dogs are lowered (using the feed dog position switch) so that the fabric can be moved in any direction.

Caution

· When free-motion quilting, control the speed at which you move the fabric to match the sewing speed. If the fabric is moved faster than the sewing speed, the needle may break, and other damage may occur.

· Adjusting the free motion presser foot height

A. Select the stitch.

B. Tap to display the settings screen, and find " Free Motion Foot Height ".

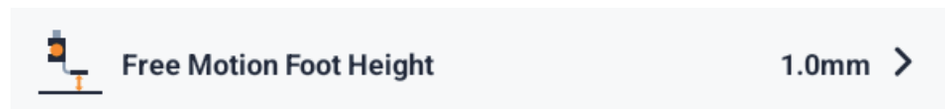

C. Select the Free Motion Foot Height.

D. Tap to return to the original screen.

Caution

· To achieve balanced tension while sewing, you need to adjust the upper thread tension. For details, refer to "Setting the Thread Tension." Test using a sample of the quilting fabric.

Raising the Presser Foot Hands-Free

Using the presser foot lifter, you can raise and lower the presser foot with your knee, freeing up your hands to focus on sewing.

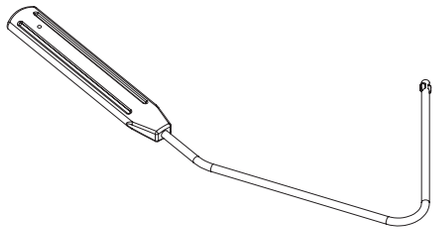

· Installing the presser foot lifter

A. Turn off the machine.

B. Insert the presser foot lifter into the mounting slot on the lower right front of the sewing machine.

Align the protrusion on the presser foot lifter with the groove in the mounting slot, and then insert the presser foot lifter completely.

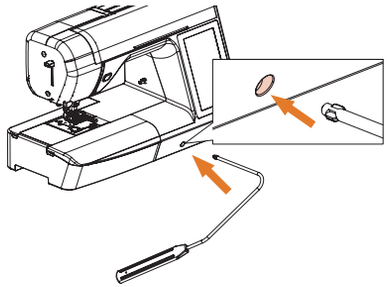

Caution

· If the presser foot lifter is not fully inserted into the mounting slot, it may fall out while the sewing machine is operating.

· Using the presser foot lifter

A. Stop the sewing machine.

B. Push the presser foot lifter to the right with your knee.

· Hold the presser foot lifter in the pushed-to-the-right position.

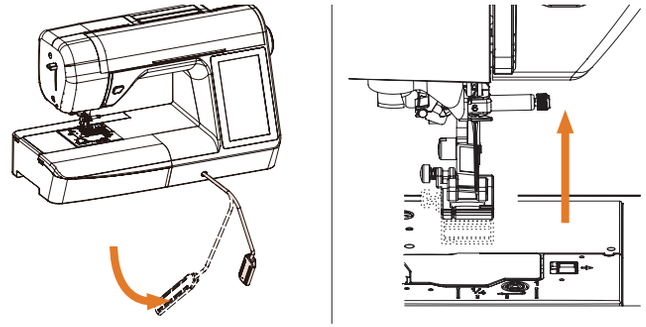

→ The presser foot is raised.

C. Release the presser foot lifter.

→ The presser foot is lowered.

Caution

· The presser foot lifter function is disabled while sewing.

Stitch Setting Chart

The following table lists the applications, stitch lengths and widths for utility stitches, and whether twin needle sewing is possible.

Tips

· The stitches shown in the table below may differ slightly from the stitch patterns displayed on the LCD.

· The automatic reinforcement function cannot be used with series 4 buttonhole stitches.

· Do not sew reverse stitches when using the synchronizer presser foot.

Stitch	No.	Stitch Name	Presser Foot	Application	Twin Needle	Auto Reinforcement Type	Synchronizer Presser Foot
	1-01	Straight Stitch (Left)	J	General Sewing, Sewing Gathers Or Pintucks, Etc.	Yes (J)	Reverse	No
	1-02	Straight Stitch (Left)	J	General Sewing, Sewing Gathers Or Pintucks, Etc.	Yes (J)	Reverse	Yes
	1-03	Straight Stitch (Center)	J	General Sewing, Sewing Gathers Or Pintucks, Etc.	Yes (J)	Reverse	No
	1-04	Straight Stitch (Center)	J	General Sewing, Sewing Gathers Or Pintucks, Etc.	Yes (J)	Reinforcement	No

Stitch	No.	Stitch Name	Presser Foot	Application	Twin Needle	Auto Reinforcement Type	Synchronizer Presser Foot
	1-05	Triple Stretch Stitch	J	General Sewing For Reinforcing And Decorative Stitching Lines	Yes (J)	Reinforcement	No
	1-06	Straight Stitch	J	Reinforcement Stitching, Sewing And Decorative Applications	Yes (J)	Reinforcement	No
	1-07	Decorative Stitch	N	Decorative Stitching, Stitch Lines	Yes (J)	Reinforcement	No
	1-08	Basting Stitch	J	Basting	No	Reinforcement	No
	1-09	Zigzag Stitch	J	For Overcasting, Mending	Yes (J)	Reverse	No
	1-10	Zigzag Stitch	J	For Overcasting, Mending	Yes (J)	Reverse	No
	1-11	Zigzag Stitch (Right)	J	Zigzag Stitching Starting From The Right Needle Position, Forming Stitches On The Left Side	Yes (J)	Reverse	No

Stitch	No.	Stitch Name	Presser Foot	Application	Twin Needle	Auto Reinforcement Type	Synchronizer Presser Foot
	1-12	Zigzag Stitch (Left)	J	Zigzag Stitching Starting From The Left Needle Position, Forming Stitches On The Right Side	Yes (J)	Reverse	No
	1-13	2-Step Elastic Zigzag Stitch	J	Overcasting (Medium Weight And Stretch Fabrics), Applying Tape And Elastic	Yes (J)	Reverse	No
	1-14	3-Step Elastic Zigzag Stitch	J	Overcasting (Medium Weight, Heavyweight And Stretch Fabrics), Applying Tape And Elastic	No	Reverse	No
	1-15	Overedge Stitch	G	Reinforcing Lightweight And Medium Weight Fabrics	No	Reinforcement	No
	1-16	Overedge Stitch	G	Reinforcing Heavyweight Fabrics	No	Reinforcement	No
	1-17	Overedge Stitch	G	Reinforcing Medium Weight, Heavyweight And Delicate Fabrics, Or Decorative Stitching	No	Reinforcement	No
	1-18	Overedge Stitch	J*1	Reinforcing Seams On Stretch Fabrics	Yes (J)	Reinforcement	No

Stitch	No.	Stitch Name	Presser Foot	Application	Twin Needle	Auto Reinforcement Type	Synchronizer Presser Foot
	1-19	Overedge Stitch	J	Reinforcing Medium Weight Stretch Fabrics, Heavyweight Fabrics, And Decorative Stitching	Yes (J)	Reinforcement	No
	1-20	Overedge Stitch	J	Reinforcing Stretch Fabrics And Decorative Stitching	Yes (J)	Reinforcement	No
	1-21	Overedge Stitch	J	Edge Stitching For Stretch Knits	No	Reinforcement	No
	1-22	Single Needle Diamond Overedge Stitch	J	Reinforcing Stretch Fabrics And Seams	Yes (J)	Reinforcement	No
	1-23	Single Needle Diamond Overedge Stitch	J	Reinforcing Stretch Fabrics	Yes (J)	Reinforcement	No
	1-24	With Trimmer	S	Sewing Straight Stitches While Cutting Fabric	No	Reinforcement	No
	1-25	With Trimmer	S	Sewing Straight Stitches While Cutting Fabric	No	Reinforcement	No

Stitch	No.	Stitch Name	Presser Foot	Application	Twin Needle	Auto Reinforcement Type	Synchronizer Presser Foot
	1-26	With Trimmer	S	Sewing Straight Stitches While Cutting Fabric	No	Reinforcement	No
	1-27	With Trimmer	S	Sewing Straight Stitches While Cutting Fabric	No	Reinforcement	No
	1-28	With Trimmer	S	Sewing Straight Stitches While Cutting Fabric	No	Reinforcement	No
	1-29	Piecing Stitch (Right)	J	Piecing With A 6.5 Mm Right Seam Allowance	No	Reverse	No
	1-30	Piecing Stitch (Center)	J	Piecing	No	Reverse	No
	1-31	Piecing Stitch (Left)	J	Piecing With A 6.5 Mm Right Seam Allowance	No	Reverse	Yes
	1-32	Hand-look Quilting Stitch	J	Sewing Quilting Stitches That Resemble Hand Quilting Stitches	No	Reinforcement	No

Stitch	No.	Stitch Name	Presser Foot	Application	Twin Needle	Auto Reinforcement Type	Synchronizer Presser Foot
	1-33	Fiber Appliqué Zigzag Stitch	J	Using Zigzag Stitch On Appliqué Fiber Fabric For Fusing And Sewing	No	Reverse	Yes
	1-34	Fiber Appliqué Stitch	J	For Invisible Appliqué Or Attaching Trims	No	Reinforcement	No
	1-35	Quilting Stippling Stitch	J	Quilting Backgrounds	No	Reinforcement	No
	2-01	Blind Stitch	R	Hemming Woven Fabrics	No	Reinforcement	No
	2-02	Blind Stitch for Stretch Fabrics	R	Hemming Stretch Fabrics	No	Reinforcement	No
	2-03	Blanket Stitch	J	Appliqué, Decorative Blanket Stitch	Yes (J)	Reinforcement	No
	2-04	Shell Stitch	J	Shell Stitch On Fabric	Yes (J)	Reinforcement	No

Stitch	No.	Stitch Name	Presser Foot	Application	Twin Needle	Auto Reinforcement Type	Synchronizer Presser Foot
	2-05	Scallop Stitch	N	Decorative Edging On Blouse Collars, Handkerchiefs	Yes (J)	Reinforcement	No
	2-06	Scallop Stitch	N	Decorative Edging On Blouse Collars, Handkerchiefs	No	Reinforcement	No
	2-07	Patchwork Stitch	J	Patchwork Stitching, Decorative Stitching	Yes (J)	Reinforcement	No
	2-08	Patchwork Overlock Stitch with Twin Needle	J	Patchwork Stitching, Decorative Stitching	Yes (J)	Reinforcement	No
	2-09	Hand-look Quilting Stitch	J	Sewing Quilting Stitches That Resemble Hand Quilting Stitches	Yes (J)	Reinforcement	No
	2-10	Smocking Stitch	J	Smocking Stitch, Decorative Stitching	Yes (J)	Reinforcement	No
	2-11	Feather Stitch	J	Fancy, Decorative Stitching	Yes (J)	Reinforcement	No

Stitch	No.	Stitch Name	Presser Foot	Application	Twin Needle	Auto Reinforcement Type	Synchronizer Presser Foot
	2-12	Fancy Cross Stitch	J	Fancy, Bridging, And Decorative Stitching	Yes (J)	Reinforcement	No
	2-13	Tape Attaching Stitch	J	Attaching Tape To The Edges Of Stretch Fabrics	Yes (J)	Reinforcement	No
	2-14	Ladder Stitch	J	Decorative Stitching	No	Reinforcement	No
	2-15	Scallop Stitch	J	Decorative Topstitching	Yes (J)	Reinforcement	No
	2-16	Decorative Stitch	N	Decorative Stitching	Yes (J)	Reinforcement	No
	2-17	Serpentine Stitch	N	Decorative Stitching And Elastic Attachment	Yes (J)	Reinforcement	No
	2-18	Decorative Stitch	N	Decorative Stitching And Appliqué	Yes (J)	Reinforcement	No

Stitch	No.	Stitch Name	Presser Foot	Application	Twin Needle	Auto Reinforcement Type	Synchronizer Presser Foot
	2-19	Decorative Stippling Stitch	N	Decorative Stitching	No	Reinforcement	No
	3-01	Pin Tuck Stitch	N	Decorative Pin Tucks, Left Straight Triple Stitch	Yes (J)	Reinforcement	No
	3-02	Pin Tuck Stitch	–	Decorative Pin Tucks, Center Straight Triple Stitch	Yes (J)	Reinforcement	No
	3-03	Pin Tuck Zigzag Stitch	–	Decorative Pin Tucks, Topstitch	Yes (J)	Reinforcement	No
	3-04	Pin Tuck Stitch	N	Decorative Pin Tucks, Lace Decorative Picot Stitch	No	Reinforcement	No
	3-05	Pin Tuck Stitch	N	Decorative Pin Tucks	No	Reinforcement	No
	3-06	Pin Tuck Stitch	N	Decorative Pin Tuck Lace Stitch	No	Reinforcement	No

Stitch	No.	Stitch Name	Presser Foot	Application	Twin Needle	Auto Reinforcement Type	Synchronizer Presser Foot
	3-07	Pin Tuck Stitch	N	Heirloom, Decorative Pin Tucks	No	Reinforcement	No
	3-08	Pin Tuck Stitch	N	Heirloom, Decorative Pin Tucks	No	Reinforcement	No
	3-09	Pin Tuck Stitch	N	Heirloom, Decorative Pin Tucks	Yes (J)	Reinforcement	No
	3-10	Pin Tuck Stitch	N	Heirloom, Decorative Pin Tucks	Yes (J)	Reinforcement	No
	3-11	Pin Tuck Stitch	N	Heirloom, Decorative Pin Tucks	Yes (J)	Reinforcement	No
	3-12	Honeycomb Stitch	N	Heirloom, Decorative Pin Tucks	Yes (J)	Reinforcement	No
	3-13	Honeycomb Stitch	N	Heirloom, Decorative Pin Tucks	Yes (J)	Reinforcement	No

Stitch	No.	Stitch Name	Presser Foot	Application	Twin Needle	Auto Reinforcement Type	Synchronizer Presser Foot
	3-14	Pin Tuck Stitch	N	Heirloom, Decorative Pin Tucks	Yes (J)	Reinforcement	No
	3-15	Pin Tuck Stitch	N	Heirloom, Decorative Pin Tucks	No	Reinforcement	No
	3-16	Pin Tuck Stitch	N	Heirloom, Decorative Pin Tucks	Yes (J)	Reinforcement	No
	3-17	Pin Tuck Stitch	N	Heirloom, Decorative Pin Tucks	No	Reinforcement	No
	3-18	Pin Tuck Stitch	N	Heirloom, Decorative Pin Tucks	Yes (J)	Reinforcement	No
	3-19	Pin Tuck Stitch	N	Decorative Pin Tucks And Bridging Stitches	Yes (J)	Reinforcement	No
	3-20	Pin Tuck Stitch	N	Decorative Pin Tucks. Fancy, Attaching Ribbon	Yes (J)	Reinforcement	No

Stitch	No.	Stitch Name	Presser Foot	Application	Twin Needle	Auto Reinforcement Type	Synchronizer Presser Foot
	3-21	Pin Tuck Stitch	N	Decorative Pin Tucks, Smocking	No	Reinforcement	No
	3-22	Pin Tuck Stitch	N	Decorative Pin Tucks, Smocking	No	Reinforcement	No
	4-01	Narrow Round Buttonhole Stitch	A	Buttonholes On Lightweight To Medium Weight Fabrics	No	Auto Reinforcement	No
	4-02	Tapered Round End Buttonhole Stitch	A	Tapered Buttonholes For Reinforced Waistbands	No	Auto Reinforcement	No
	4-03	Round End Buttonhole Stitch	A	Buttonholes With Vertical Bartacks In Heavyweight Fabrics	No	Auto Reinforcement	No
	4-04	Narrow Square Buttonhole Stitch	A	Buttonholes On Lightweight To Medium Weight Fabrics	No	Auto Reinforcement	No
	4-05	Stretch Buttonhole Stitch	A	Buttonholes On Stretch Or Woven Fabrics	No	Auto Reinforcement	No

Stitch	No.	Stitch Name	Presser Foot	Application	Twin Needle	Auto Reinforcement Type	Synchronizer Presser Foot
	4-06	Heirloom Buttonhole Stitch	A	Buttonholes On Heirloom And Stretch Fabrics	No	Auto Reinforcement	No
	4-07	Bound Buttonhole Stitch	A	First Step For Making Bound Buttonholes	No	Auto Reinforcement	No
	4-08	Keyhole Buttonhole Stitch	A	Buttonholes On Heavyweight Or Thick Fabrics For Larger Flat Buttons	No	Auto Reinforcement	No
	4-09	Tapered Keyhole Buttonhole Stitch	A	Buttonholes On Medium To Heavyweight Fabrics For Larger Flat Buttons	No	Auto Reinforcement	No
	4-10	Keyhole Buttonhole Stitch	A	Buttonholes With Vertical Bartacks For Reinforcement In Heavyweight Or Thick Fabrics	No	Auto Reinforcement	No
	4-11	Darning Stitch	A	Darning On Medium Weight Fabrics	No	Auto Reinforcement	No
	4-12	Darning Stitch	A	Darning On Heavyweight Fabrics	No	Auto Reinforcement	No

Stitch	No.	Stitch Name	Presser Foot	Application	Twin Needle	Auto Reinforcement Type	Synchronizer Presser Foot
	4-13	Bartack Stitch	A	Reinforcing Openings Such As Pockets	No	Auto Reinforcement	No
	4-14	Button Sewing Stitch	M	Attaching Buttons	No	Auto Reinforcement	No
	4-15	Eyelet Stitch	N	For Sewing Eyelets On Belts, Etc.	No	Auto Reinforcement	No

Chapter 9 Start Embroidery

Embroidery Steps

Please follow the steps below to prepare for embroidery.

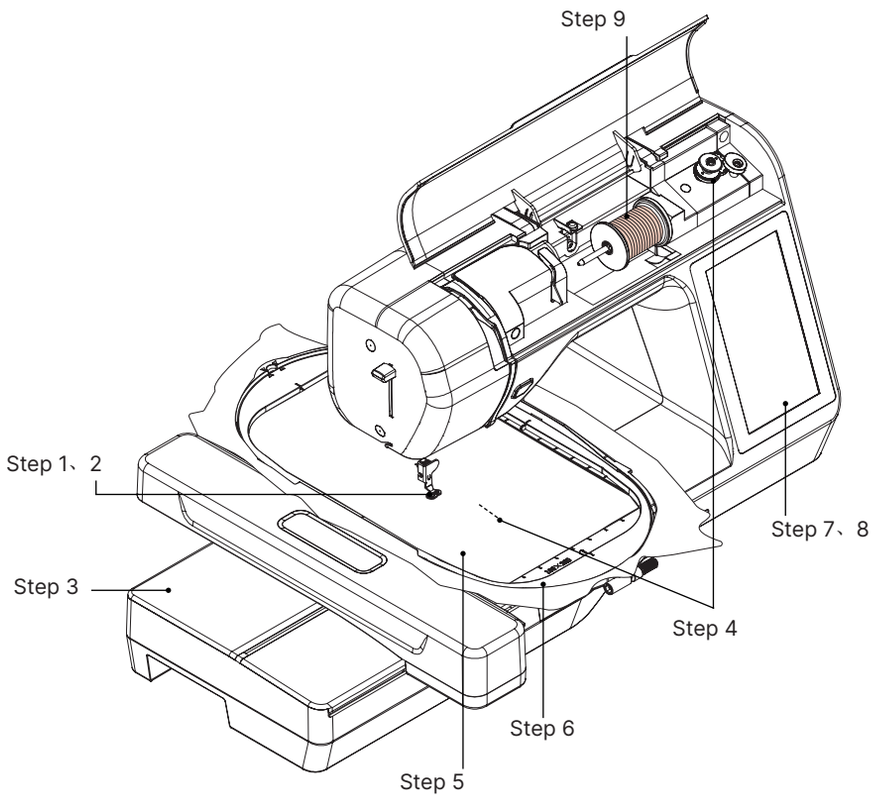

Step	Objective	Description	Page
1	Presser Foot Installation	Install Embroidery Presser Foot “U”	Page 83
2	Check the Needle Condition	Use A Size 75/11 Needle For Embroidery	Page 47
3	Install Embroidery Unit	Install The Embroidery Unit	Page 84
4	Bobbin Installation	Wind The Embroidery Bobbin Thread And Install The Bobbin Properly	Page 30
5	Fabric Preparation	Attach Stabilizer To The Fabric, Then Hoop The Fabric In The Embroidery Frame	Page 88
6	Install Embroidery Hoop	Attach The Embroidery Hoop To The Embroidery Unit	Page 91
7	Pattern Selection	Turn On The Main Power, Then Select The Embroidery Pattern	Page 94
8	Check Layout	Check And Adjust The Embroidery Size And Position	Page 95
9	Embroider the Pattern	Start Embroidery	Page 96

* When embroidering on thick fabrics or materials with additional stabilizer (such as heavy twill or foam), it is recommended to use a size 90/14 needle.

Install the Embroidery Presser Foot

Caution

·Always use the embroidery presser foot when embroidering. If another presser foot is used, the needle may hit the presser foot, causing the needle to bend or break and potentially resulting in personal injury.

A. Press the Needle Position button to raise the needle.

B. Press the Lock button.

C. Raise the presser foot lever.

D. Press the black button on the presser foot holder to remove the presser foot.

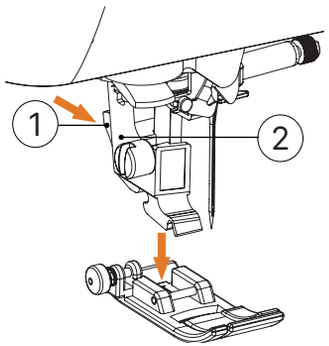

1. Black button
2. Presser foot holder

E. Use the supplied screwdriver to loosen the screw on the presser foot holder, then remove the presser foot holder.

· A flat-head screwdriver can be used to loosen or tighten the presser foot holder screw.

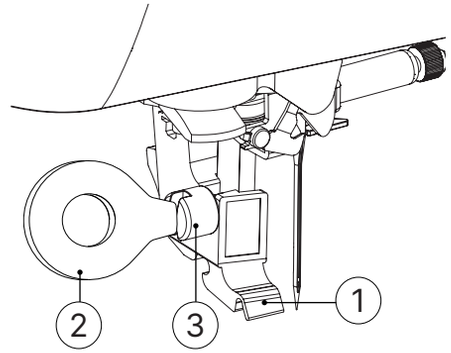

1. Presser foot holder
2. Flat-head screwdriver
3. Presser foot holder screw

F. Install the “U” embroidery presser foot, ensuring the presser foot holder screw fits into the groove of the presser foot.

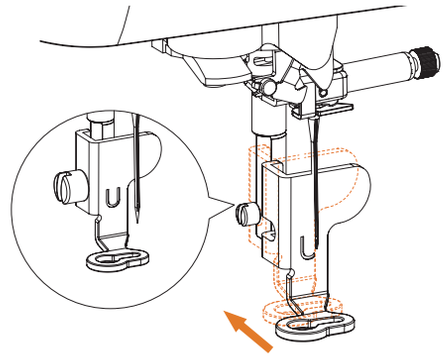

· When installing, make sure the “U” embroidery presser foot remains vertical.

G. Hold the embroidery presser foot with your right hand, then use the supplied screwdriver to firmly tighten the presser foot holder screw.

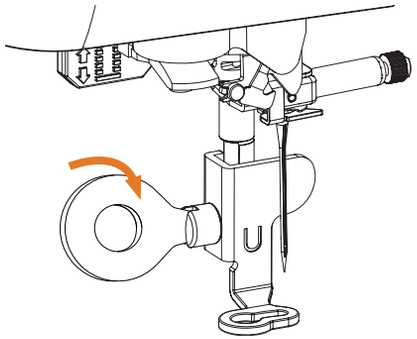

Caution

· Use the supplied screwdriver to firmly tighten the embroidery presser foot screw. If the screw becomes loose, the needle may hit the presser foot and could cause injury.

H. Press the Unlock button to unlock all keys and buttons.

Install the Embroidery Unit

Caution

· Do not move the sewing machine before the embroidery unit is properly installed. The embroidery unit may fall and cause injury.

· Keep hands and other objects away from the embroidery rails and frame. Otherwise injury may occur.

Tips

· Do not touch the connector of the embroidery unit connection slot. The connector may be damaged and cause a malfunction.

· Do not lift the embroidery rails or move them forcefully. Doing so may cause a malfunction.

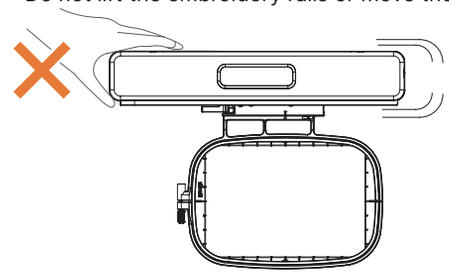

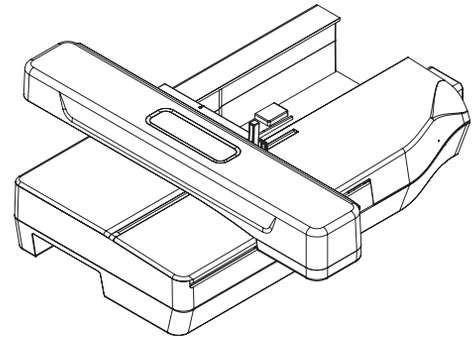

A. Prepare the embroidery unit.

Tips

· The embroidery unit can be installed directly without turning off the machine.

B. Pull the auxiliary work platform to the left.

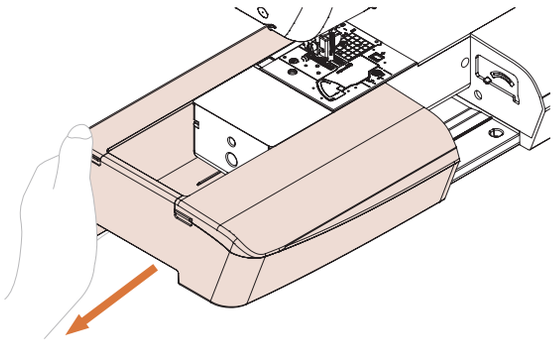

C. Slide the raised part on the connection port cover in the direction of the arrow to open the cover.

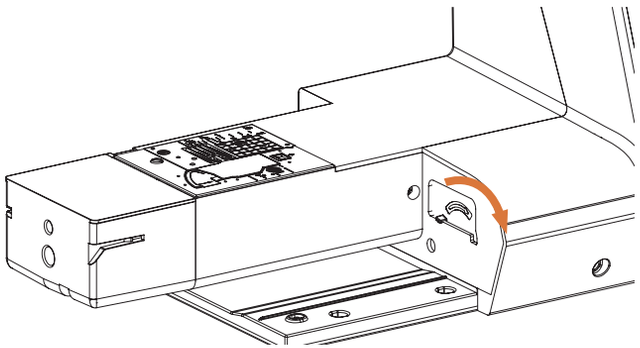

Tips

· Be sure to close the connection port cover when the embroidery unit is not in use.

D. Insert the embroidery unit connector into the connection port, then gently push the embroidery unit in until it clicks into place.

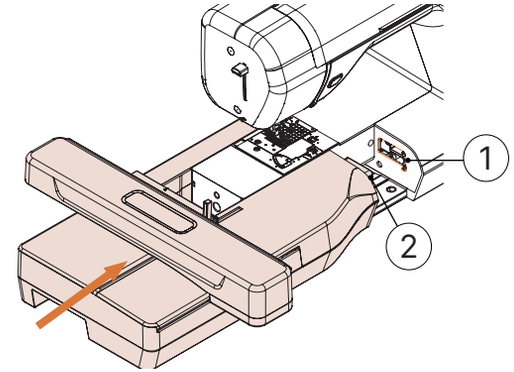

1. Connection port
2. Embroidery unit connector

Tips

· Make sure there is no gap between the embroidery unit and the machine. Otherwise, the embroidery pattern may not stitch correctly. Ensure the connector is fully inserted into the connection port.

· When installing the embroidery unit on the machine, do not push the rails, as this may damage the embroidery unit.

E. Turn on the machine.

→ A message will appear on the screen.

F. Make sure your hands or other objects are not near the embroidery unit, then tap confirm

→ A message will appear on the screen.

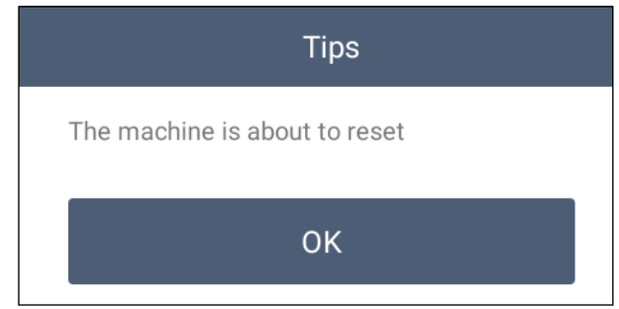

→ The rails move to the initial position.

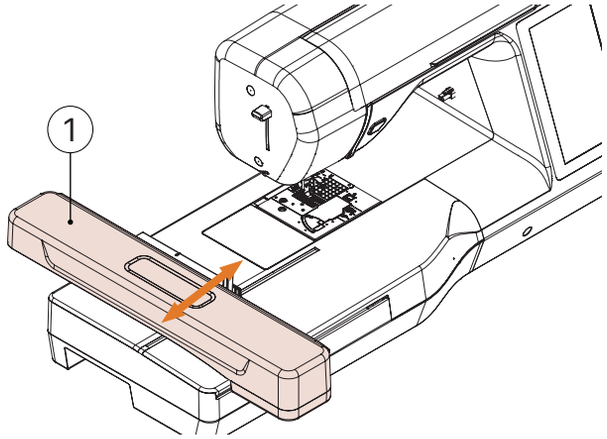

1. Rail

Caution

· When the machine is embroidering, keep your hands and other objects away from the embroidery rails and frame. Otherwise, injury may occur.

Tips

· If the machine is not properly initialized, the initial screen will not appear. This does not indicate a malfunction. If this happens, turn off the machine and then turn it on again.

→ The home screen is displayed.

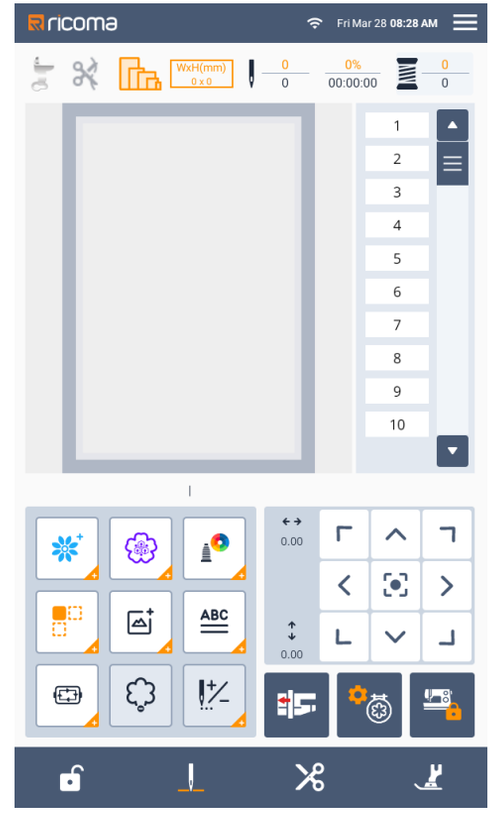

· For detailed information about embroidery patterns, refer to the section “Selecting Embroidery Patterns.”

Tips

· Utility stitches cannot be selected when the embroidery unit is installed.

Removing the Embroidery Unit

Make sure the sewing machine has completely stopped operating and follow the instructions below.

A. Remove the embroidery hoop.

· For details about removing the embroidery hoop, refer to the section “Installing the Embroidery Hoop”.

B. Press the button, then tap confirm.

→ The embroidery rails will move to the storage position.

C. Turn off the machine.

Tips

· This machine supports hot removal. When the embroidery hoop is not installed, the embroidery unit can be removed without turning off the power.

D. Press and hold the release button on the lower-left side of the embroidery unit, then slowly pull the embroidery unit to the left.

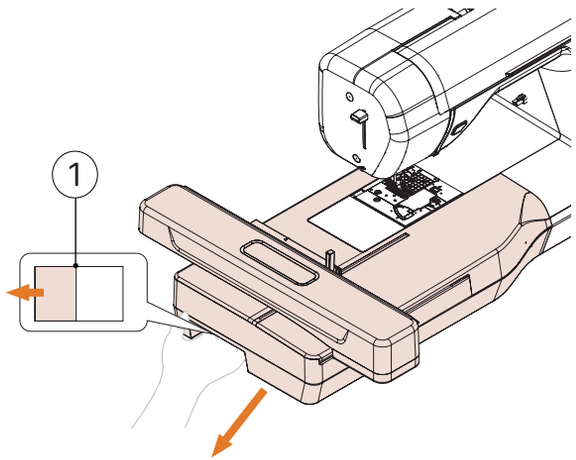

1. Release button

Caution

· Do not hold the release button area when moving the embroidery unit.

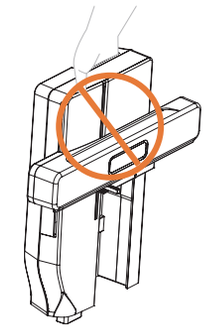

Achieving Beautiful Embroidery Results

Many factors can affect the quality of your embroidery results. Using the correct stabilizer and properly hooping the fabric are two important factors mentioned earlier. Another important factor is choosing the correct needle and thread. Refer to the information below about thread.

Upper Thread	Use Embroidery Thread Designed For This Sewing Machine. Other Embroidery Threads May Not Produce Optimal Results.
Bobbin Thread	Use Bobbin Thread Designed For This Sewing Machine.

Caution

· Before starting embroidery, check that there is enough thread in the bobbin. If there is not enough thread when you begin embroidering, you will need to rewind the bobbin in the middle of the embroidery process.

· When embroidering on large garments (especially jackets or other heavy fabrics), do not allow the fabric to hang off the table. Otherwise, the embroidery unit may not move freely and the embroidery frame may hit the needle, causing the needle to bend or break and possibly resulting in injury. Place the fabric so that it does not hang off the work surface, or secure it to prevent it from hanging.

Tips

· If threads other than those mentioned above are used, the embroidery results may be incorrect.

· Do not place objects within the movement range of the embroidery frame. The frame may hit the object and affect the appearance of the embroidery pattern.

· When embroidering on large garments (especially jackets or heavy fabrics), do not allow the fabric to hang off the table. Otherwise, the embroidery unit may not move freely and the embroidery design may become distorted.

Preparing the Fabric

Caution

· Use fabric with a thickness of less than 3 mm / 0.12 in. If the fabric thickness exceeds 3 mm / 0.12 in, the needle may break.

· When using layered fabrics such as those with thick batting, adjust the embroidery presser foot height in the embroidery settings screen to achieve better results.

· When embroidering on thick pile fabrics (such as towels), we recommend placing water-soluble stabilizer on top of the fabric. This helps reduce the effect of the pile and produces better embroidery results.

Tips

· Tap the settings icon on the home screen. In the Presser Foot Height screen, select the presser foot height. Adjust the presser foot height for thick or large fabrics.

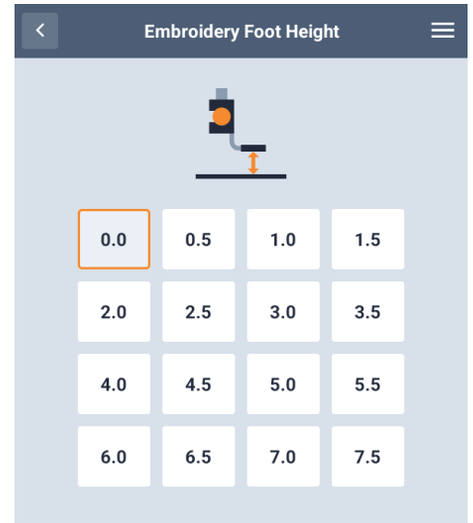

· To increase the space between the presser foot and the needle plate, set the embroidery presser foot height to a larger value. For most embroidery, a setting of 1.5 mm is recommended.

Place Iron-on Stabilizer (Backing) on the Fabric

For best embroidery results, be sure to use embroidery stabilizer. Follow the instructions provided with the stabilizer packaging.

When using fabrics that cannot be ironed (such as pile fabrics or fabrics whose loops expand when heated), or when ironing is difficult, place the stabilizer under the fabric without ironing it first, then hoop both the fabric and the stabilizer in the embroidery frame.

Caution

· When embroidering stretch fabrics, lightweight fabrics, coarse woven fabrics, or fabrics where designs may shrink, be sure to use embroidery stabilizer. Otherwise, the needle may break and cause injury. Not using stabilizer may result in poor embroidery quality.

A. Use stabilizer that is larger than the embroidery hoop being used.

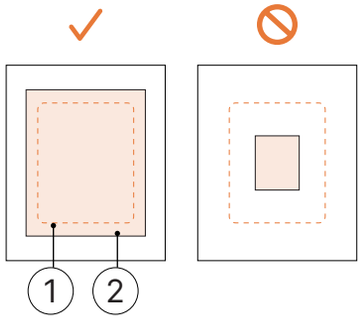

1. Size of the embroidery hoop
2. Iron-on stabilizer (backing)

B. Iron the stabilizer onto the back side of the fabric.

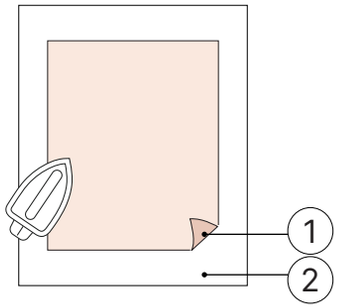

1. Iron-on side of the stabilizer
2. Fabric (wrong side)

Tips

· When embroidering on delicate fabrics such as organdy or fine cloth, or on pile fabrics such as terry cloth or corduroy, use water-soluble stabilizer (optional) for best results. Water-soluble stabilizer dissolves completely in water and helps produce cleaner embroidery results.

Hooping the Fabric in the Embroidery Frame

· Types of Embroidery Hoops

The types and number of embroidery hoops provided vary depending on the machine model.

A. Large

Embroidery area: 260 × 160 mm / 10.2 × 6.3 in

Used for combined or connected lettering designs, or for larger embroidery designs.

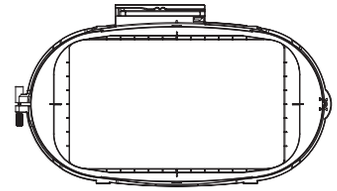

B. Medium-Large

Embroidery area: 180 × 130 mm / 7.1 × 5.1 in

Used for designs between 100 × 100 mm / 3.9 × 3.9 in and 180 × 130 mm / 7.1 × 5.1 in

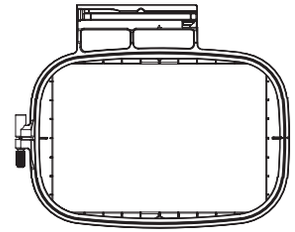

C. Medium

Embroidery area: 100 × 100 mm / 3.9 × 3.9 in

Use this hoop for designs smaller than 100 × 100 mm / 3.9 × 3.9 in .

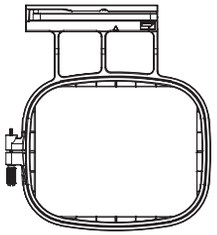

D. Small

Embroidery area: 20 × 60 mm / 0.8 × 2.4 in

Use this hoop for small designs such as name tags.

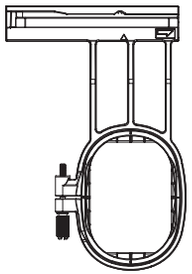

Caution

· If the embroidery hoop used is too small, the presser foot may hit the hoop during embroidery, which may cause personal injury or machine damage.

· Insert the Fabric

Tips

· If the fabric is not firmly secured in the embroidery hoop, the embroidery quality may be poor. Place the fabric on a flat surface and gently tighten it in the hoop. Follow the steps below to correctly insert the fabric.

A. Lift and loosen the embroidery hoop adjustment screw, then remove the inner frame.

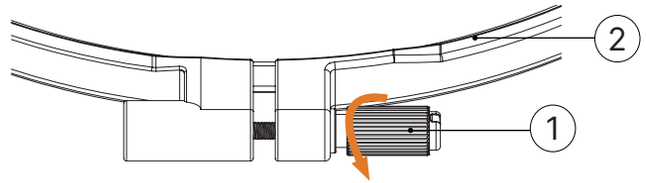

1. Frame adjustment screw
2. Inner frame

B. Place the fabric with the right side facing up on top of the outer frame.

Insert the inner frame again, making sure the △ mark on the inner frame aligns with the ▽ mark on the outer frame.

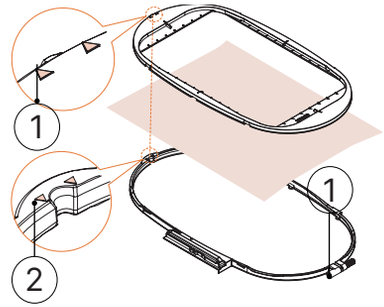

1. △ mark on the inner frame
2. ▽ mark on the outer frame
3. Frame adjustment screw

· Using the Embroidery Positioning Sheet

Use the embroidery positioning sheet with the hoop when you want to embroider a design at a specific location.

A. Use chalk to mark the location on the fabric where the embroidery will be placed.

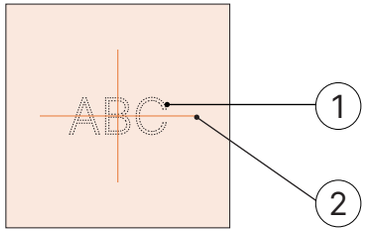

1. Embroidery design
2. Mark

B. Place the embroidery positioning sheet in the inner frame. Align the guide lines on the positioning sheet with the mark on the fabric.

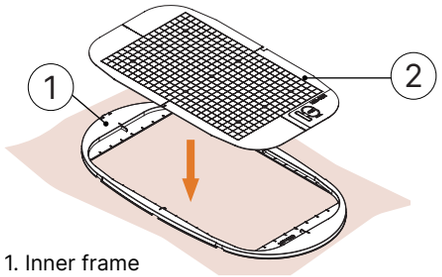

1. Inner frame
2. Guide line

C. Gently stretch the fabric so that it has no folds or wrinkles, then press the inner frame into the outer frame.

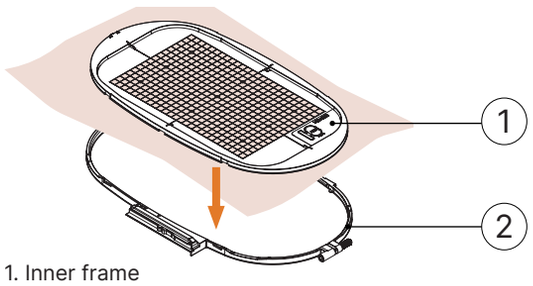

1. Inner frame
2. Outer frame

D. Remove the embroidery positioning sheet.

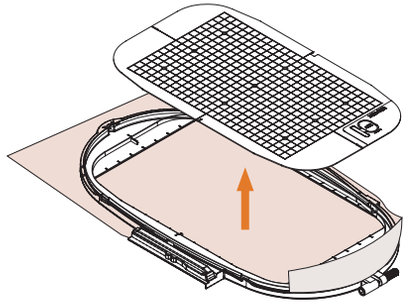

Embroidering Small Fabric Pieces or Fabric Edges

Use embroidery stabilizer to provide additional support. When the embroidery is finished, carefully remove the stabilizer. Attach the stabilizer as shown below. It is recommended to use stabilizer for all embroidery.

· Embroidering Small Fabric Pieces

Use temporary spray adhesive to attach the small piece of fabric to a larger piece of fabric in the hoop. If you prefer not to use spray adhesive, you can secure the stabilizer with basting stitches.

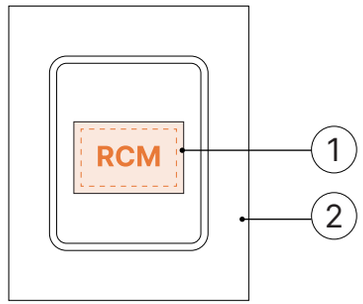

1. Fabric
2. Stabilizer

· Embroidering Edges or Corners

Use temporary spray adhesive to attach a small piece of fabric to a larger fabric placed in the hoop. If you prefer not to use spray adhesive, use basting stitches to secure the stabilizer.

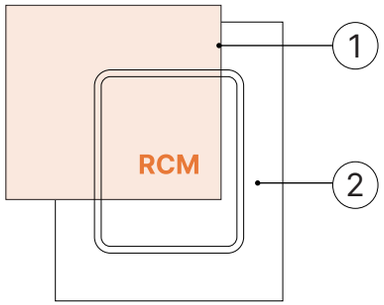

1. Fabric
2. Stabilizer

· Embroidering Ribbon or Tape

Secure it with double-sided tape or temporary spray adhesive.

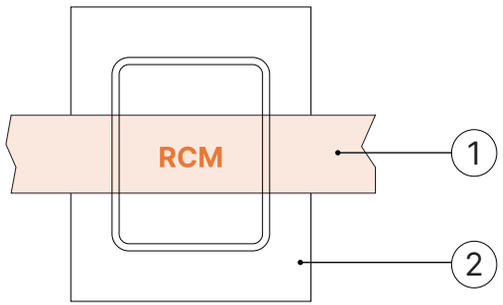

1. Ribbon or tape
2. Stabilizer

Installing the Embroidery Hoop

Tips

·Before installing the embroidery hoop, wind the bobbin and insert it into the machine. Make sure to use the recommended bobbin thread.

A. When the hoop fixing lever is lifted, the presser foot will automatically rise.

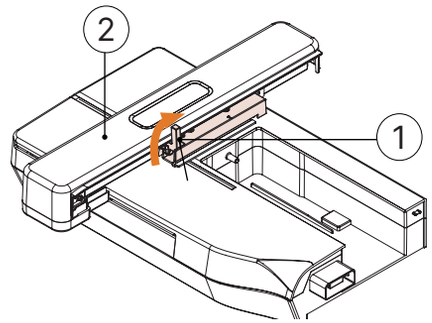

1. Hoop fixing lever
2. Rail

B. Align the embroidery hoop guide bar with the right side of the hoop holder.

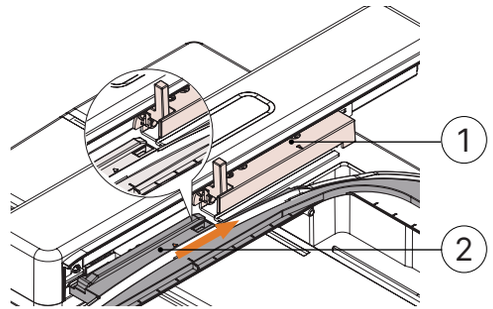

1. Hoop holder
2. Hoop guide bar

C. Slide the embroidery hoop into the holder and make sure the arrow mark on the hoop aligns with the arrow mark on the holder.

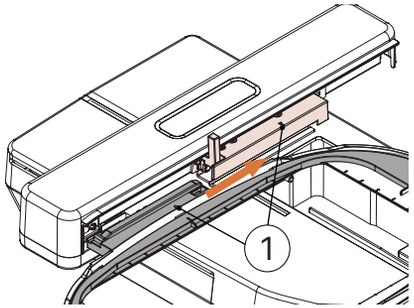

1. Arrow mark

D. Lower the hoop fixing lever so that it stays level with the frame, securing the embroidery hoop into the hoop holder.

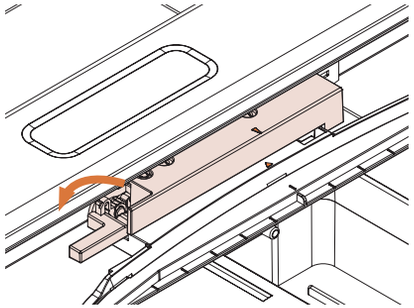

Caution

· If the hoop fixing lever is not lowered, the message below will appear. You must lower the hoop fixing lever before starting embroidery.

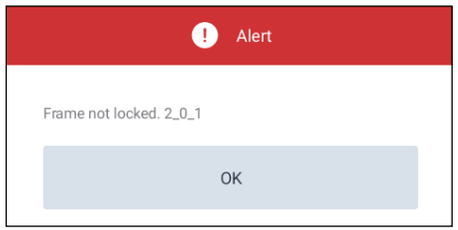

Removing the Embroidery Hoop

A. When the hoop fixing lever is lifted, the presser foot will automatically rise.

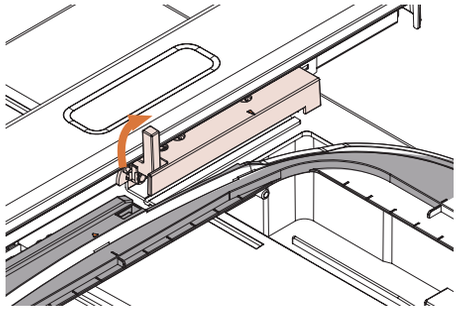

B. Pull the embroidery hoop toward yourself to remove it.

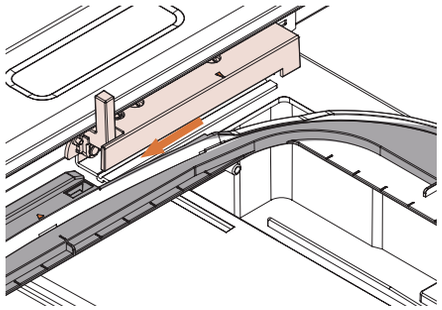

Selecting an Embroidery Pattern

· Copyright Information

The patterns stored in the machine are for personal use only. Publishing or using copyrighted patterns for commercial purposes is considered infringement and is strictly prohibited by copyright law.

· Types of Embroidery Designs

The machine memory contains a large number of alphabet and decorative embroidery patterns (for a complete overview of the patterns stored in the machine, please refer to the “Embroidery Design Guide”).

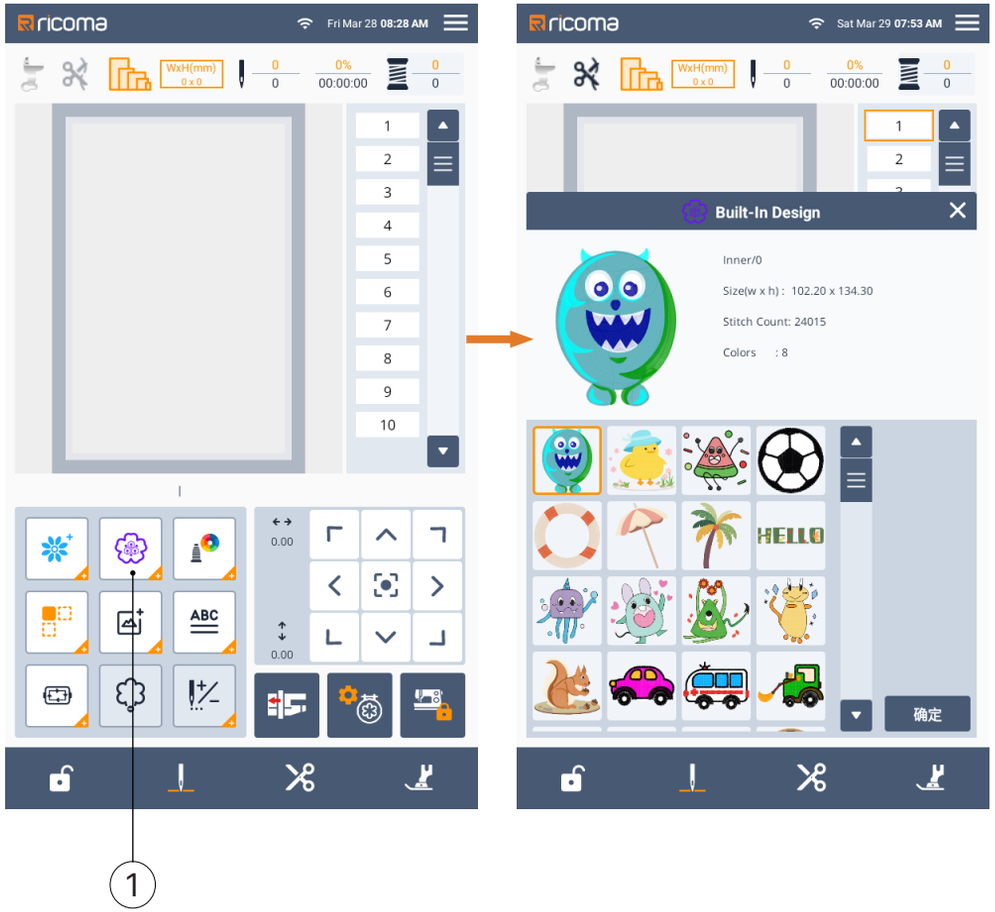

1. Tap the "Pattern Selection Button" to enter the built-in pattern library.

· Selecting an Embroidery Pattern

Select a simple built-in pattern in the machine to perform a test embroidery. You can try different patterns and edit them in the “Embroidery” screen.

A. Select a pattern from the built-in pattern screen.

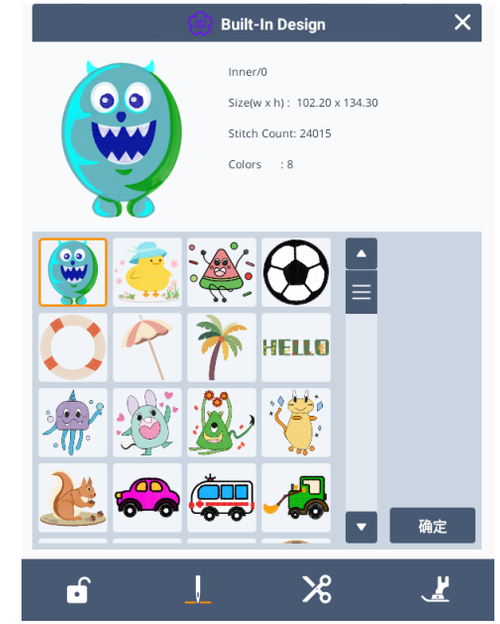

B. Tap , or scroll the list to display the desired pattern on the screen.

C. Tap to return to the home screen.

D. Tap to enter embroidery mode, and the icon will change to .

E. Press the "Start / Stop" button on the machine to begin embroidery.

Confirming the Design Position

The design is positioned at the center of the embroidery hoop by default. If you need to adjust the design position to better embroider it on the garment, you can check the design before starting embroidery.

· Checking the Design Position

The embroidery hoop will move to display the design position. Carefully observe the hoop to ensure the design will be embroidered in the correct location.

A. Use the trace preview function. Tap this button on the home screen.

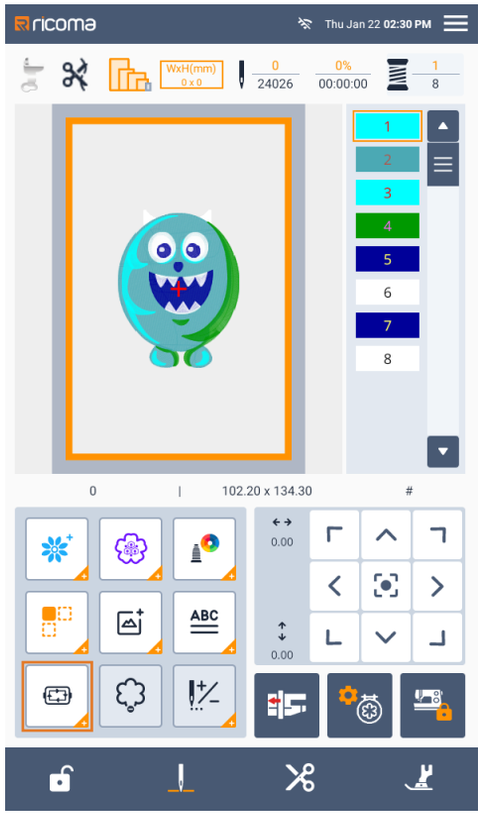

B. Tap the key you want to check.

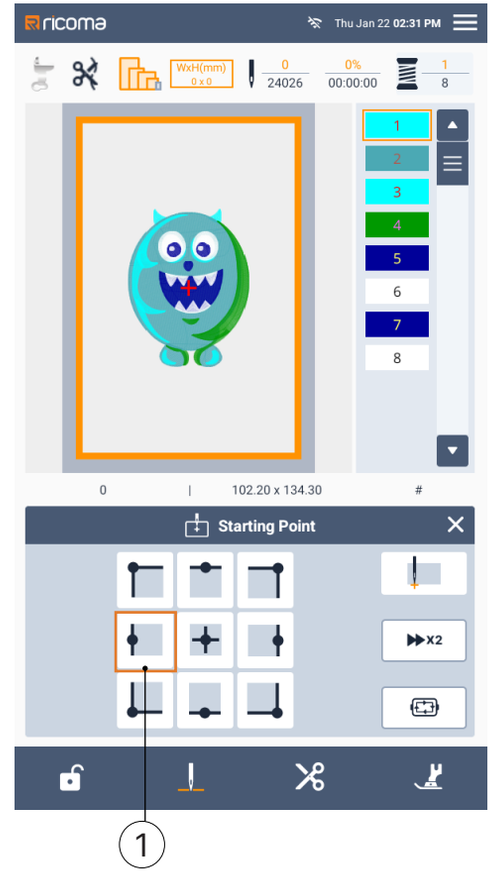

1. Select the needle position

→ The needle will move to the selected position in the design.

C. To view the entire embroidery area, tap this button.

The embroidery hoop will move to display the embroidery area.

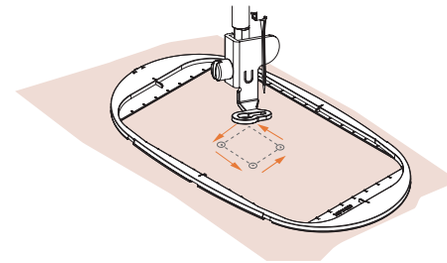

Embroidering a Design

After completing the preparation work, you can start embroidering. This section introduces the steps for embroidery.

A. Prepare the embroidery thread with the colors shown on the screen.

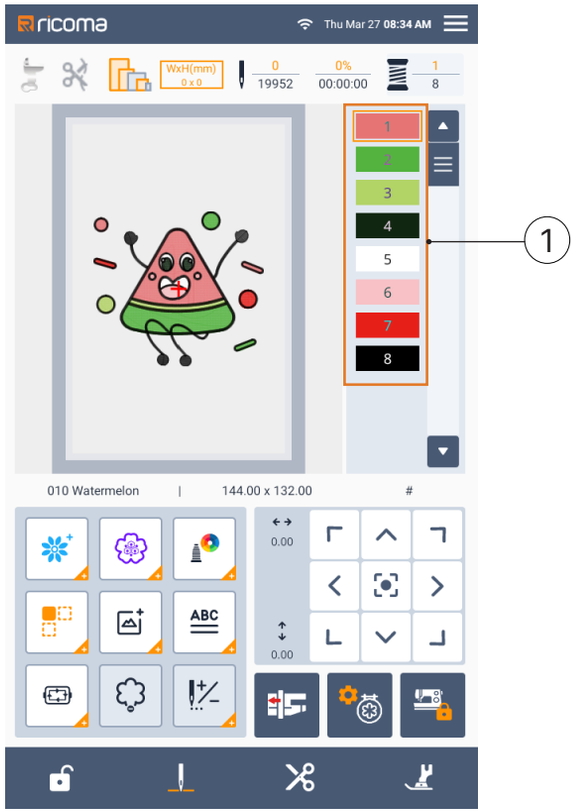

1. Embroidery color sequence

· You can change the thread color number displayed. Tap this button and adjust the setting in the settings screen. For more details, refer to “Changing Thread Color Display”.

B. Install the embroidery thread and thread it through the needle eye.

· Please refer to the sections “Upper Threading” and “Threading”.

Tips

· Before using the needle threader, make sure to press this button to raise the needle to the upper position.

C. Pass the thread through the hole of the embroidery presser foot, then gently hold it with your left hand, keeping the thread slightly loose.

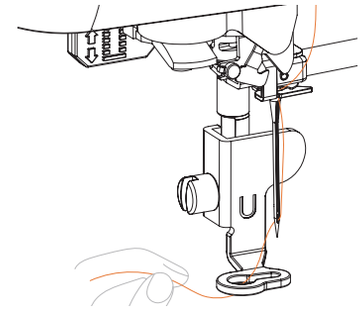

Caution

· If the thread is pulled too tightly, the needle may break or bend.

· During embroidery, do not allow your hands or other objects to touch the rails. The design may become misaligned.

D. Lower the presser foot, then press the "Start / Stop" button to begin embroidery. After sewing 5 to 6 stitches, press the "Start / Stop" button again to stop the machine.

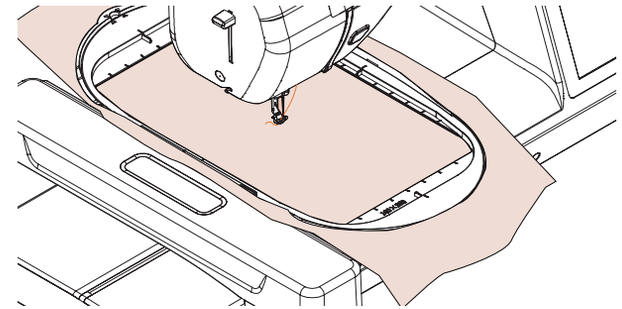

E. Cut off the excess thread at the end of the stitching line. If the stitching line is under the presser foot, raise the presser foot first, then trim the excess thread.

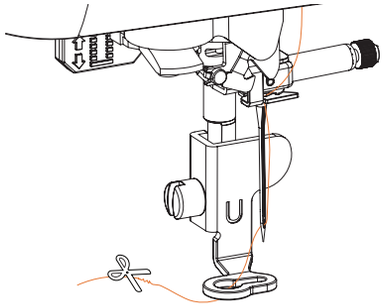

· If thread is left at the beginning of the stitches, it may be stitched over again when embroidery continues, making it difficult to remove after the embroidery is finished. Please trim the starting thread.

F. Press the "Start / Stop" button to start embroidery.

→ After one color is completed, the machine will automatically stop and cut the thread. A color-change prompt will appear on the screen.

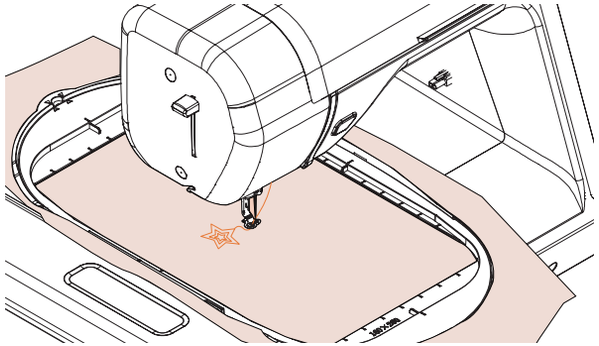

G. Remove the current thread from the machine and thread the next color.

H. After the last color is embroidered, a pop-up message will appear on the screen indicating that the embroidery is complete. Tap confirm screen will return to the initial page.

Changing Thread Color Display

Tips

· The colors shown on the screen may differ slightly from the actual thread spool colors.

A. Tap this button to enter the color settings page.

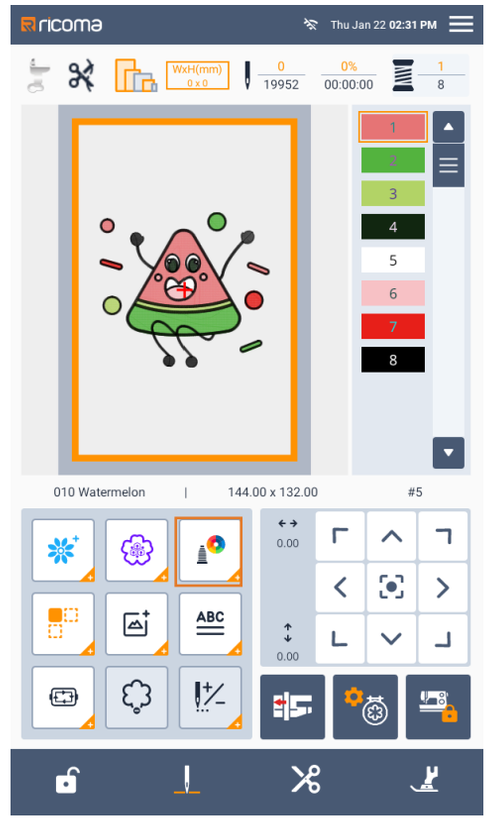

B. Select the color sequence number that needs to be changed.
The corresponding color block in the design will flash.

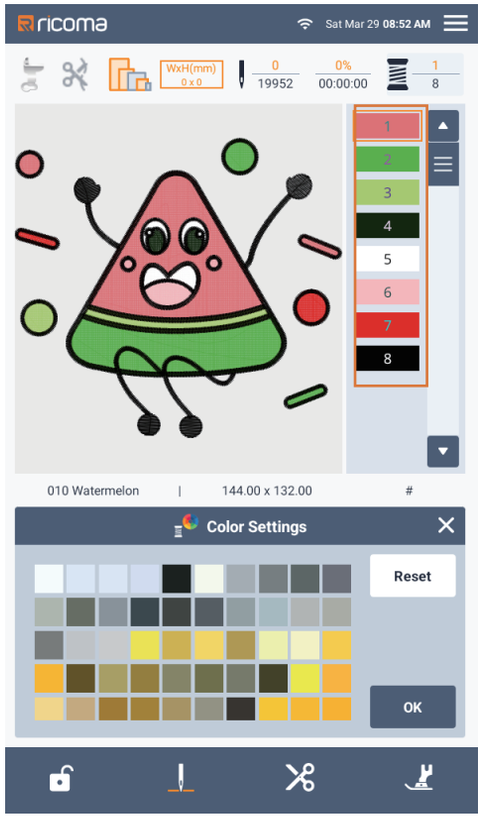

C. Tap the desired color block. Scroll down to select more colors.

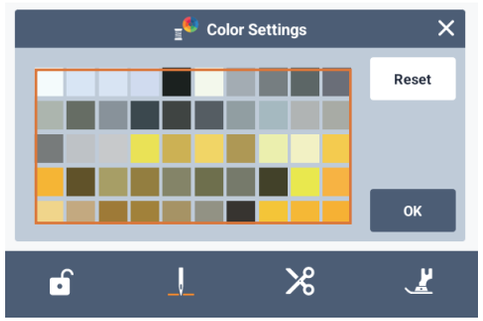

D. Tap "Confirm". The color sequence change will be completed and the screen will automatically return to the original page.

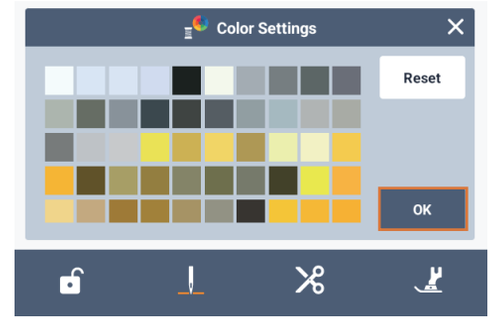

Embroidery Thread Type Settings

A. Tap this button to enter the embroidery parameter settings page.

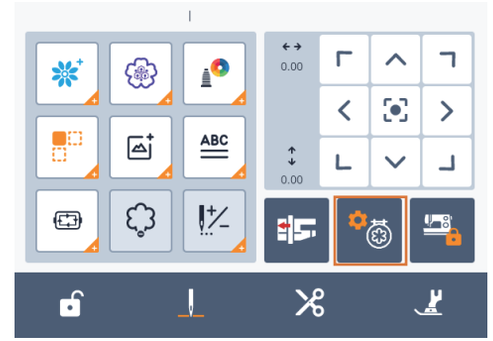

B. Locate Thread Settings and tap it to enter the thread settings page.

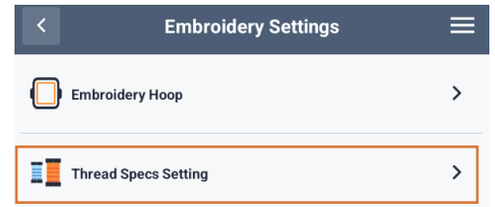

C. After selecting the desired embroidery thread, click back to complete the setup.

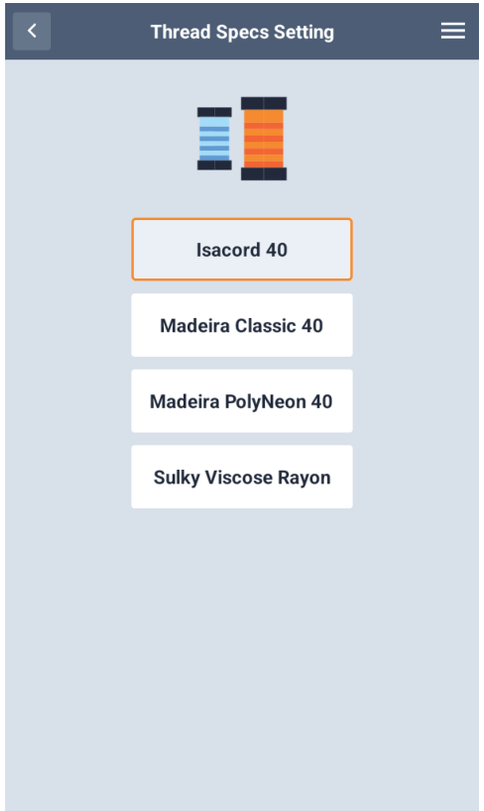

* Cotton-based polyester yarn is sold in different countries and regions.

Sewing

Chapter 1 Sewing Techniques

Test Sewing

After installing the needle and thread appropriate for the fabric to be sewn, the sewing machine will automatically set the stitch length and width for the selected stitch. However, it is recommended to perform a test sew before starting your actual project, as the desired result may not be achievable depending on the fabric and stitch type. When test sewing, it is recommended to use the same fabric and thread as your actual project, and check the thread tension, stitch length, and width. Because the sewing result varies depending on the stitch type and the number of fabric layers, please test sew under the same conditions as your actual project.

Change Sewing Direction

A. Stop the sewing machine when the stitches reach the corner.

Keep the needle in a low position (in the fabric). If the needle remains high when the machine stops sewing, press the "Needle Position" button to lower the needle.

B. Lift the presser foot lever and then rotate the fabric.

The needle is used as the pivot when rotating the fabric.

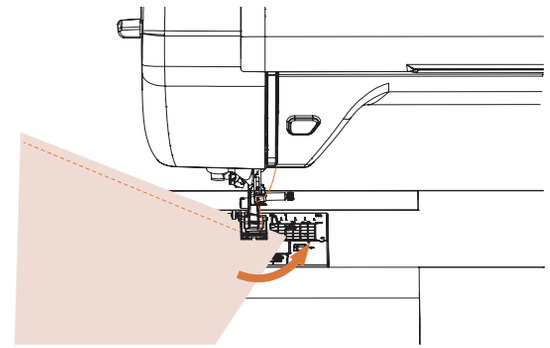

C. Lower the presser foot lever and continue sewing.

Sewing Curves

Stop sewing, then slightly change the sewing direction and sew along the curve. For details on sewing with an even seam allowance, see "Sewing with an Even Seam Allowance".

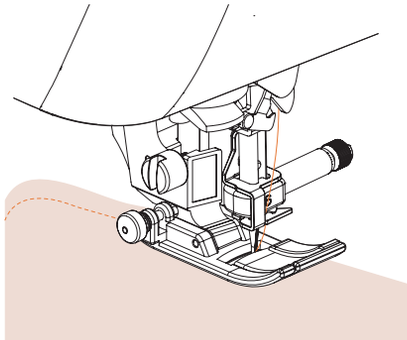

When sewing along a curve using a zigzag stitch, choosing a shorter stitch length can result in a better stitch.

Sewing Tubular Fabric

The attached work platform can be removed to use a free-arm sewing method, making it easier to sew tubular fabrics such as cuffs and trouser legs.

A. Extend the additional work platform to the left.

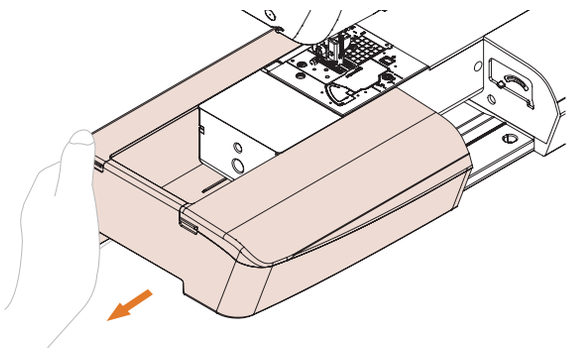

B. Slide the part to be sewn onto the free arm, and then sew from the top.

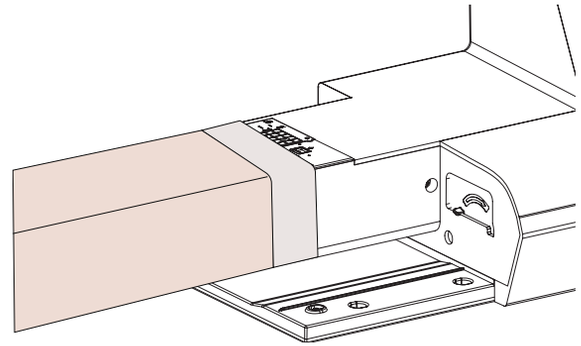

C. After completing the free arm sewing, reinstall the additional work platform back into its original position.

Sew Even Seams

To sew an even seam, begin sewing with the seam edge to the right of the presser foot and the fabric edge aligned with the mark on the right side of the presser foot or the needle plate.

· Align the fabric with the presser foot.

Sew while keeping the right side of the presser foot at a fixed distance from the edge of the fabric.

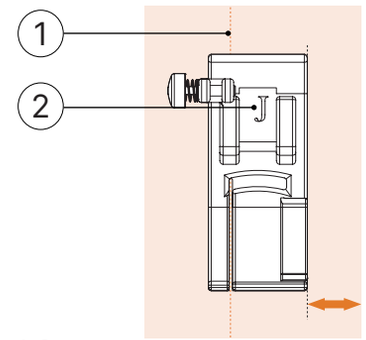

1. Seam
2. Presser foot

· Align the fabric with the needle plate markings.

The markings on the needle plate indicate the distance from the needle position (left needle position) when sewing the seam using a straight stitch. Sew while keeping the edge of the fabric aligned with the markings on the needle plate. The distance between the markings on the upper scale is 3 mm, and the distance between the markings in the grid is 5 mm / 0.19 in.

For the stitch at the left needle position (stitch width: 0.0 mm / 0 in)

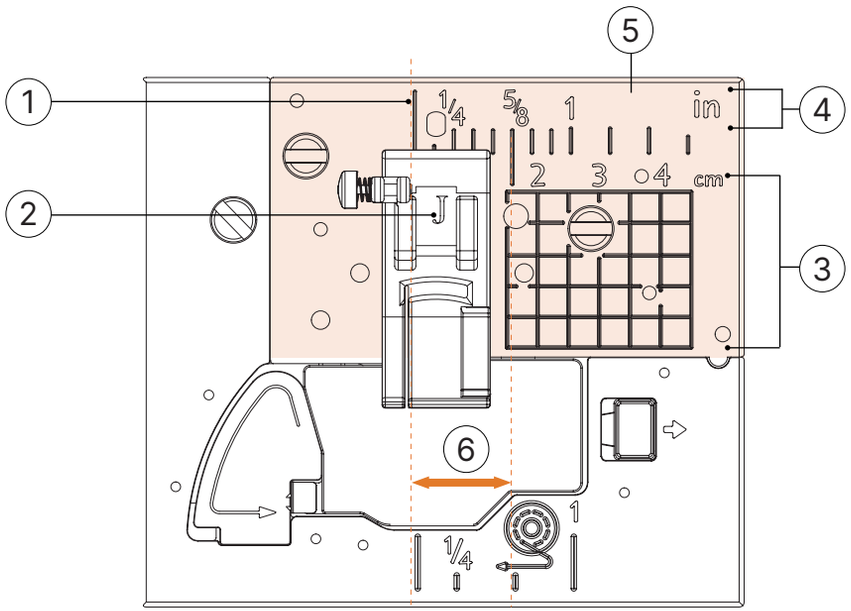

1. Seam
2. Presser foot
3. Centimeter
4. Inch
5. Needle plate
6. 16 mm / 0.63 in

Chapter 2 Sewing Various Fabrics

Sewing Thick Fabric

· If the fabric is not suitable for placement under the presser feet.

If it is difficult to place the fabric under the presser foot, raise the presser foot lever to bring the presser foot to its highest position.

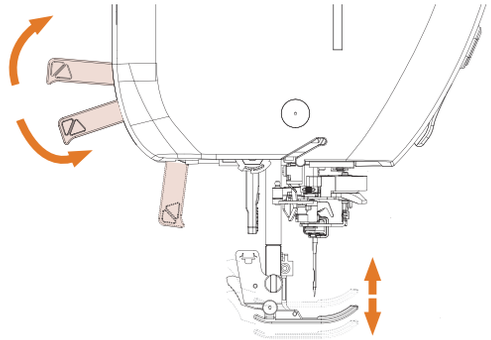

· If you are sewing a thick seam and the fabric cannot move forward when you start sewing.

If you are sewing a thick seam and the presser foot is not level, the fabric cannot be pushed in, as shown below. In this case, use the presser foot locking pivot (the black button to the left of the zigzag presser foot "J") to keep the presser foot level while sewing, thus allowing the fabric to be fed in smoothly.

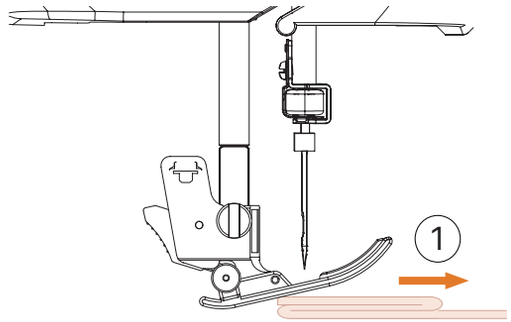

1. Sewing direction

A. Lift the presser foot lever.

B. Align the starting position of the stitches and then sew the fabric.

C. Keep the bend presser foot "J" horizontal, press the presser foot locking shaft, and then lower the presser foot lever.

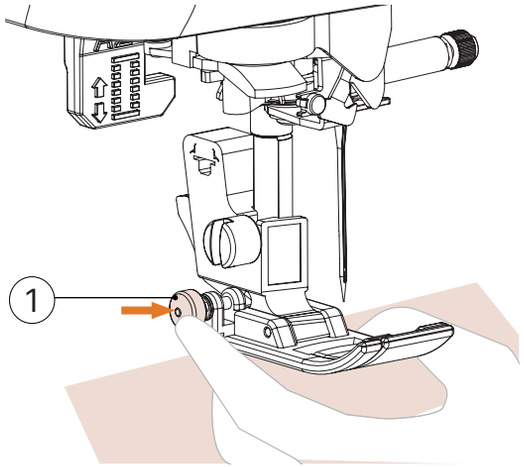

1. Presser foot retaining shaft (black button)

D. Loosen the pressure foot retaining shaft.

→ Keep the presser foot horizontal to allow fabric to be fed in.

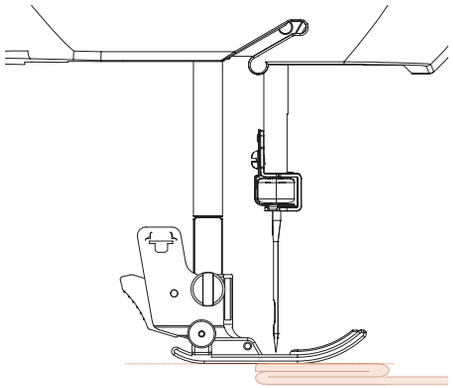

→ After sewing the seam, the presser foot will return to its original angle.

Tips

· Adjusting the presser foot pressure in the settings screen is useful for some thick fabrics.

· When the “Automatic Fabric Sensor” is set to “ON” in the settings screen , the internal sensor will automatically detect the thickness of the fabric, allowing the fabric to be pushed in smoothly for optimal sewing results.

Caution

· If the fabric being sewn is thicker than 6 mm or if too much force is applied when pushing the fabric in, it may cause the needle to bend or break.

Sewing Thin Fabric

When sewing thin fabric, the stitches may stray or fail to feed properly. Move the needle (make sure to use a fine needle) to the far left or right-hand position so that the fabric doesn't pull down into the feed dog area. If this happens, place a piece of tissue paper or lining under the fabric and sew it in with the fabric. When finished sewing, remove any excess paper.

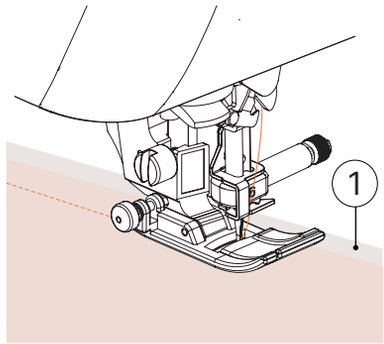

1. Lining or paper

Sewing Stretch Fabric

First, bast-sew several pieces of fabric together, and then sew them together without stretching the fabric.

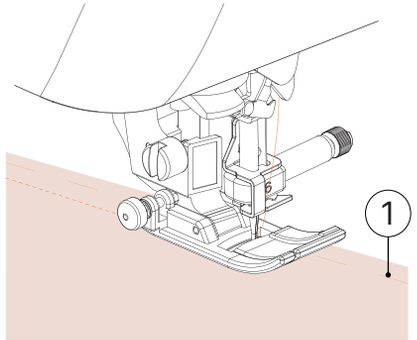

1. Lining cloth or paper

When sewing knitted fabric, using a stretch stitch will yield the best results. Also, be sure to use needles designed for knitting. Suggested stitches and their numbers are shown below.

Stitch					
Stitch Number	1-05	1-06	1-13	1-14	2-13

Sewing Hook and Loop Straps

Caution

· Use only non-adhesive hook and loop fasteners specifically designed for sewing. Adhesive tape that gets onto the needle or shuttle grooves can cause malfunctions.

· Using a fine needle (65 / 9- 75 / 11) to sew hook and loop straps may result in bent or broken needles.

Tips

· Before sewing, loosely sew the fabric and hook and loop straps together.

Make sure to rotate the handwheel to pass the needle through the hook and loop strap, and lower the needle into the hook and loop strap before sewing. Then, sew the edge of the hook and loop strap at a low speed.

If the needle does not pass through the hook and loop strap, replace the current needle with a needle suitable for thicker fabric. For more information, see "Fabric/Thread/Needle Combinations" in the "Basic Operations" section.

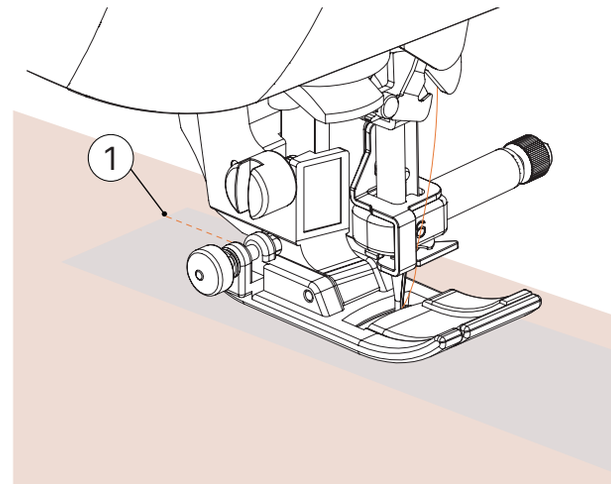

1. Edges of hook and loop straps

Chapter 3 Practical Stitches

Straight stitches are used for sewing ordinary seams.

· Use the table below and refer to the "Practical Stitch Table" introduced in the "Sewing" section of the "Basic Operations" section.

Stitch Name	Stitch	Stitch Number	Presser Foot
Basting Stitch		1 - 08	J
Straight Stitch (Left)		1 - 01	
		1 - 02	
Straight Stitch (Center)		1 - 03	
Straight Stitch (Center)		1 - 04	
Triple Stretch Stitch		1 - 05	

Basting

Use a stitch length between 5 mm / 0.19in and 20 mm / 0.79 in for basting.

A. Install the curved presser foot "J".

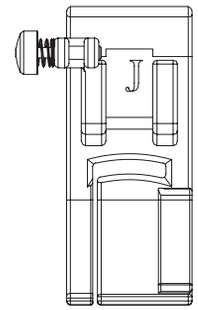

B. Select stitch 1-08.

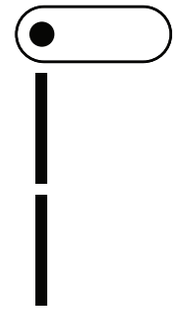

C. Begin sewing.

Basic sewing

A. Loose-stitch or piece together several pieces of fabric.

B. Install the curved presser foot "J".

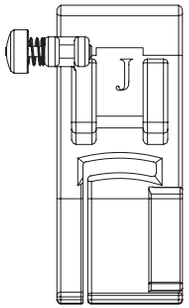

C. Select the stitch.

D. When you begin sewing, lower the needle into the fabric.

E. Lower the presser foot lever, and then begin sewing.

F. Cut the thread when the sewing is finished.

· Change the Position of the Needle

When used as a baseline, the position of the needle differs from that of the straight stitch (left needle position) and the straight stitch (center needle position).

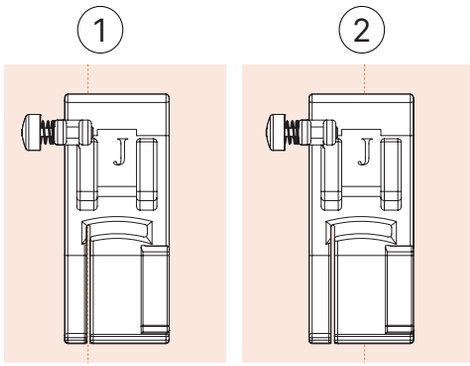

1. Straight stitch (left needle position)
2. Straight stitch (center needle position)

When the stitch width for a straight stitch (left needle position) is set to the standard setting (0.0 mm), the distance from the needle position to the right side of the presser foot is 12 mm / 0.47 in. If the stitch width is changed (between 0 and 7.0 mm / 0.28 in), the needle position will also change. By changing the stitch width and sewing with the right side of the presser foot aligned with the edge of the fabric, a fixed-width seam allowance can be used.

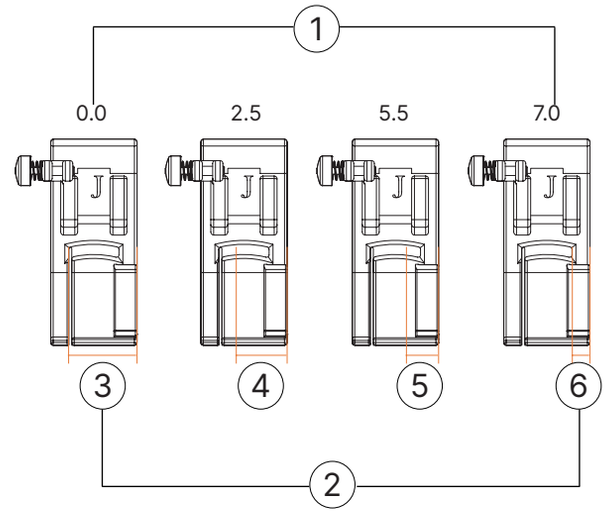

1. Stitch width setting
2. Distance from needle position to the right side of presser foot
3. 12.0 mm / 0.47 in
4. 10.0 mm / 0.39 in
5. 6.5 mm / 0.57 in
6. 5.0 mm / 0.19 in

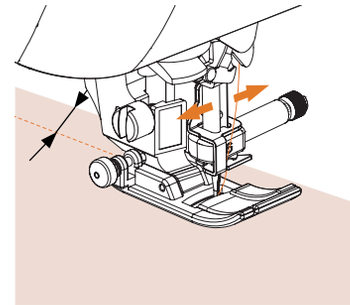

* For more information, see “Setting Stitch Width” in the “Basic Operations” section.

Chapter 4 Blind stitches

Use blind stitching to reinforce the bottom of shirts and trousers.

Use the table below and refer to the "Practical Stitch Table" introduced in the "Sewing" section of the "Basic Operations" section.

Stitch Name	Stitch	Stitch Number	Presser Foot
Blind Stitch		2-01	R
Blind Stretch Stitch		2-02	

Tips

· If the tubular fabric is too small to slide onto the sewing arm or is too short, the fabric will not be fed in and the desired effect cannot be achieved.

A. Turn your shirt or pants inside out.

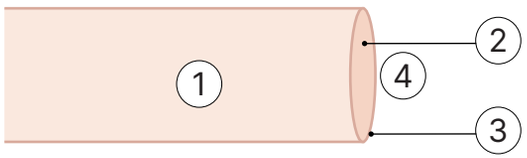

1. The reverse side of the fabric
2. The right side of the fabric
3. The edge of the fabric
4. The bottom

B. Fold the fabric along the desired seam edge and then press.

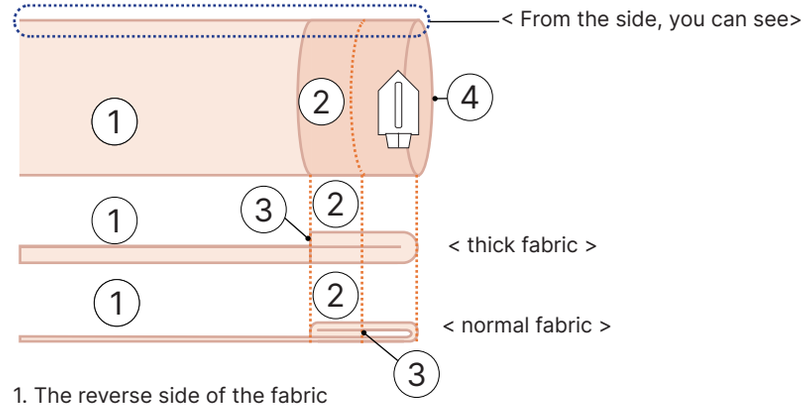

1. The reverse side of the fabric
2. The right side of the fabric
3. The edge of the fabric
4. The required edge for the fold

C. Mark the edge of the fabric with chalk about 5 mm / 0.19 in away, then bast.

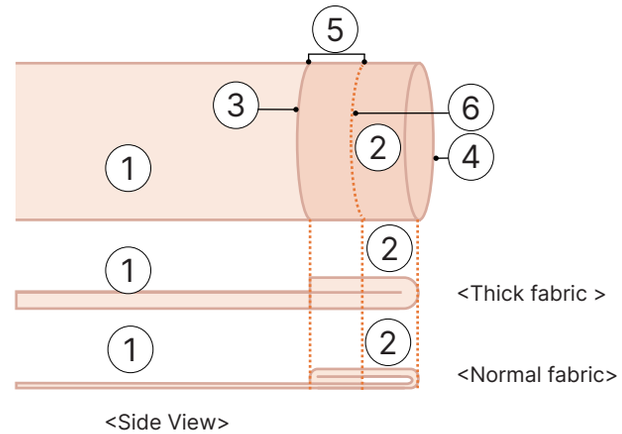

1. The reverse side of the fabric
2. The right side of the fabric
3. The edge of the fabric
4. The required edge for the fold
5. 5 mm / 0.19 in
6. Basting

D. Fold the fabric inside out along the basting seams.

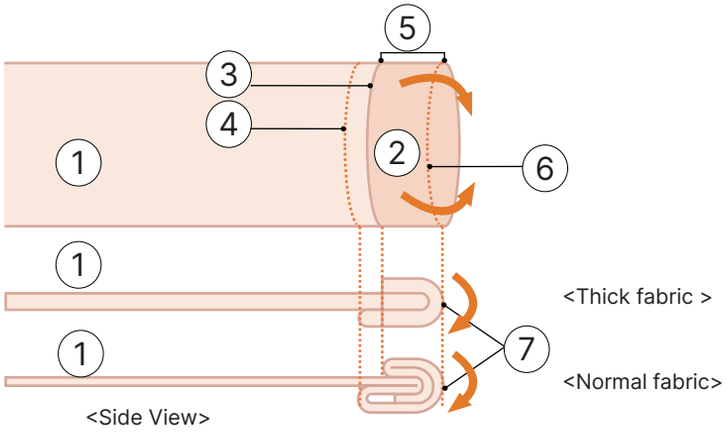

1. The reverse side of the fabric
2. The right side of the fabric
3. The edge of the fabric
4. The required edge for the fold
5. 5 mm / 0.19 in
6. Basting stitch
7. Basting point

E. Unfold the edges of the fabric, then place the fabric with the reverse side facing up.

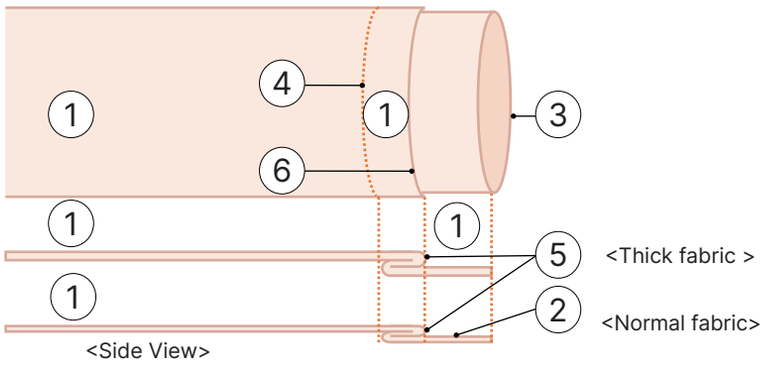

1. The reverse side of the fabric
2. The right side of the fabric
3. The edge of the fabric
4. The required edge for the fold
5. Basting point
6. Basting

F. Install the blind seam presser foot "R".

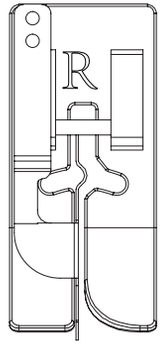

G. Select the stitch or .

H. Remove the attached work platform to use the free arm.

I. Slide the item to be sewn onto the free arm, make sure the fabric is pushed in correctly, and then begin sewing.

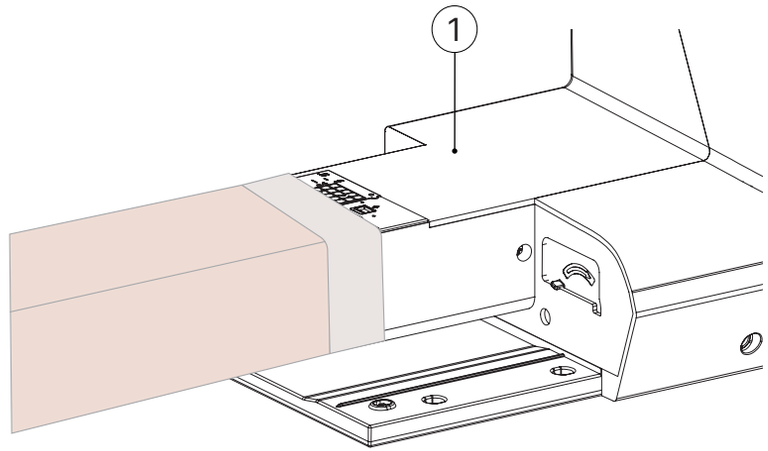

1. Free arm

J. Place the fabric so that the edge of the fold is close to the guide groove of the presser foot, and then lower the presser foot lever.

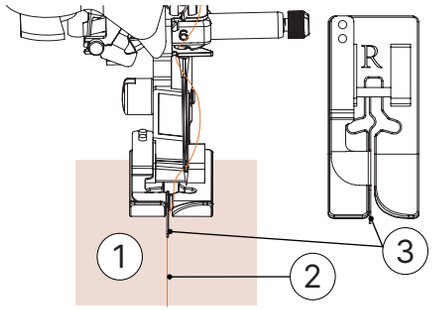

1. The reverse side of the fabric
2. Fold seam
3. Wire channel

K. Adjust the stitch width until the needle slightly catches the fold.

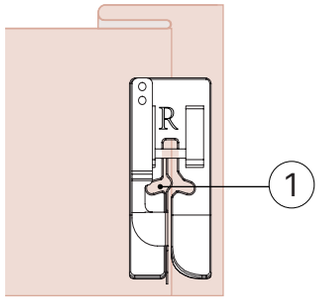

1. Needle drop point

When changing the needle drop point, lift the needle and then change the stitch width.

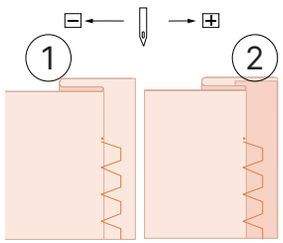

1. Thick fabric
2. Normal fabric

Tips

· If the needle fails to catch the fold at the point of impact, a blind stitch cannot be created. If the needle catches too many folds, the fabric cannot unfold, resulting in a very large seam on the right side and an unsightly finish. If you encounter any of these situations, please follow the instructions below to resolve the issue.

· If the Needle Catches too Many Folds

The needle is too far to the left.

Reduce the stitch width so that the needle slightly catches the fold.

Example: Thick fabric

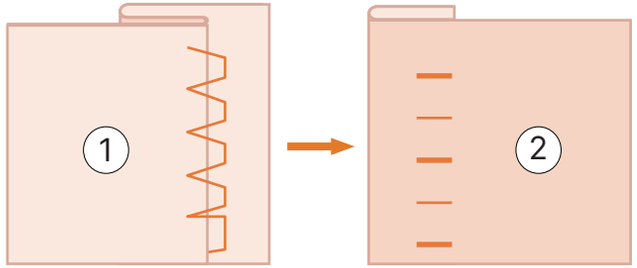

Example: Normal fabric

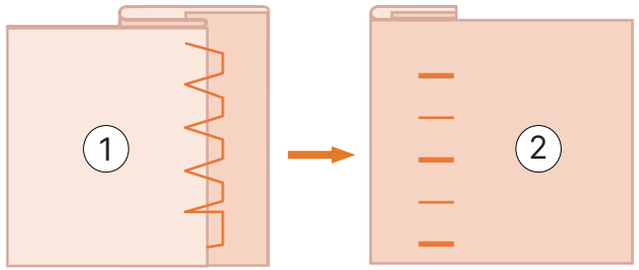

1. The reverse side of the fabric
2. the right side of the fabric

· If the Needle Does not Catch the Fold

The needle is too far to the right.

Increase the stitch width so that the needle slightly catches the fold.

Example: Thick fabric

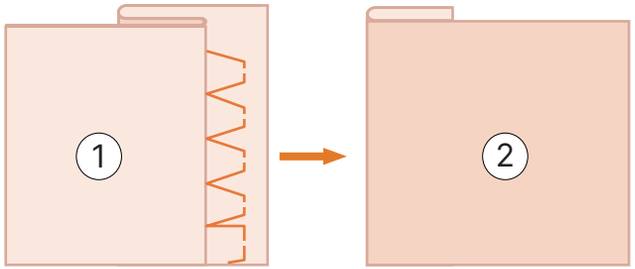

Example: Normal fabric

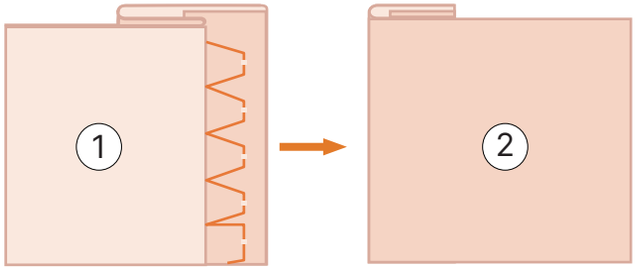

1. The reverse side of the fabric
2. the right side of the fabric

L. Sew the fold seam close to the guide groove of the presser foot.

M. After finishing, press the "Start / Stop" button to stop sewing, lift the presser foot and needle, and pull the fabric back to remove it.

Tips

· Be sure to pull the fabric backward after sewing. Pulling it sideways or forward may damage the presser foot.

N. Remove the basting stitches and turn the fabric inside out.

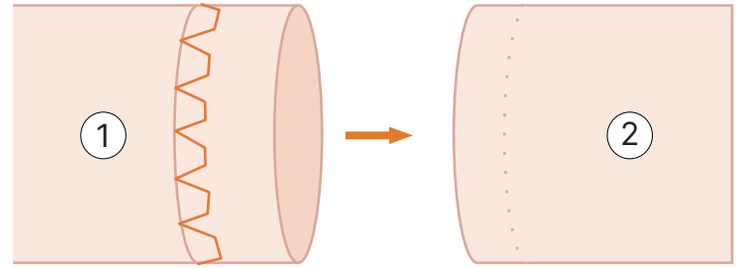

1. The reverse side of the fabric
2. the right side of the fabric

Chapter 5 Overedge Stitch

Sew overedge stitches along the edge of the cut fabric to prevent it from wearing out.

Use the Overedge Foot "G"

Use the table below and refer to the "Using the practical stitch chart introduced in the "Sewing" section of the "Basic Operations" section.

Stitch Name	Stitch	Stitch Number	Presser Foot
Overedge Stitch		1-15	G
		1-16	
		1-17	

A. Install the overedge presser foot "G".

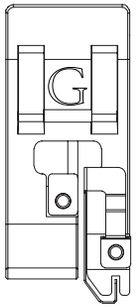

B. Select the stitch.

C. Place the fabric so that the edge of the fabric is close to the guide groove of the presser foot, and then lower the presser foot lever.

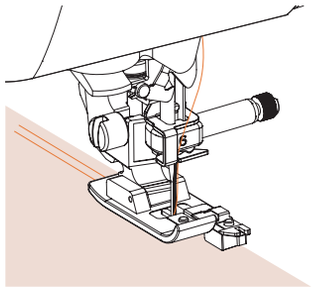

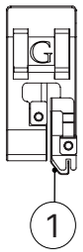

1. Wire groove

D. Sew the fabric edges close to the presser foot guide groove.

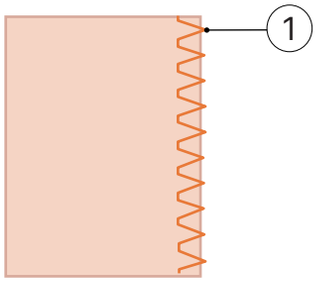

1. Needle drop point

Caution

· After adjusting the stitch width, roll the handwheel counterclockwise towards yourself. Make sure the needle does not touch the presser foot. If the needle touches the presser foot, it may break and cause personal injury.

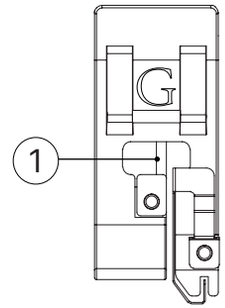

1. The needle should not touch the middle baffle.

· If the presser foot is raised to its highest position, the needle may touch the presser foot.

D. After finishing, press the "Start / Stop" button to stop sewing, lift the presser foot and needle, and pull the fabric back to remove it.

Use the Curved Presser Foot "J" to Sew the Overedge Stitch.

Use the table below and refer to the "Practical Stitch Table" introduced in the "Sewing" section of the "Basic Operations" section.

Stitch Name	Stitch	Stitch Number	Presser Foot
Zigzag Stitch		1-09	J
Zigzag Stitch (Right)		1-11	
2-Step Elastic Zigzag Stitch		1-13	
3-Step Elastic Zigzag Stitch		1-14	
Overedge Stitch		1-18	
		1-19	
		1-20	
		1-21	
Diamond Overedge Stitch		1-22	
		1-23	

A. Install the curved presser foot "J".

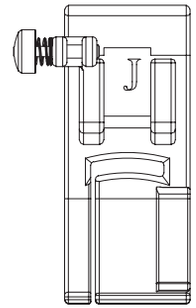

B. Select the stitch.

C. Sew along the edge of the fabric using a needle that falls on the right edge.

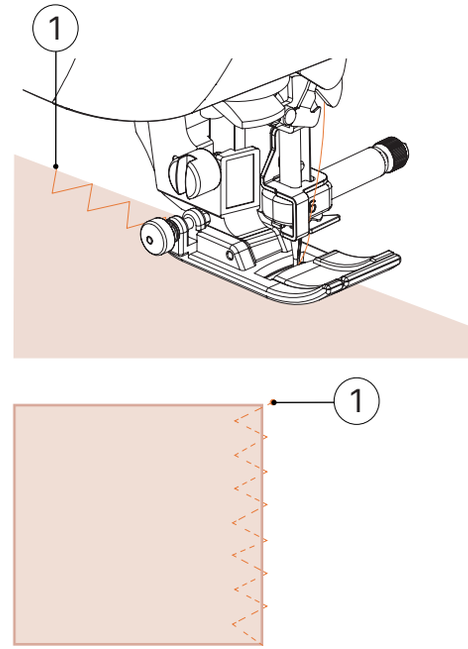

1. Needle drop point

Chapter 6 Buttonhole Stitches / Button Sewing

Use the table below and refer to the "Practical Stitch Chart" introduced in the "Sewing" section of the "Basic Operations" section.

Stitch Name	Stitch	Stitch Number	Presser Foot
Narrow Round Buttonhole Stitch		4-01	A
Tapered Round-End Buttonhole Stitch		4-02	
Round-End Buttonhole Stitch		4-03	
Narrow Square Buttonhole Stitch		4-04	
Stretch Buttonhole Stitch		4-05	
Heirloom Buttonhole Stitch		4-06	
Bound Buttonhole Stitch		4-07	
Keyhole Buttonhole Stitch		4-08	
Tapered Keyhole Buttonhole Stitch		4-09	
Keyhole Buttonhole Stitch		4-10	
Button Sewing Stitch		4-14	M

Buttonhole Sewing

The maximum length of the buttonhole is approximately 28 mm / 1.10 in (diameter + button thickness).

The buttonhole is sewn from the front of the presser foot to the back, as shown in the diagram below.

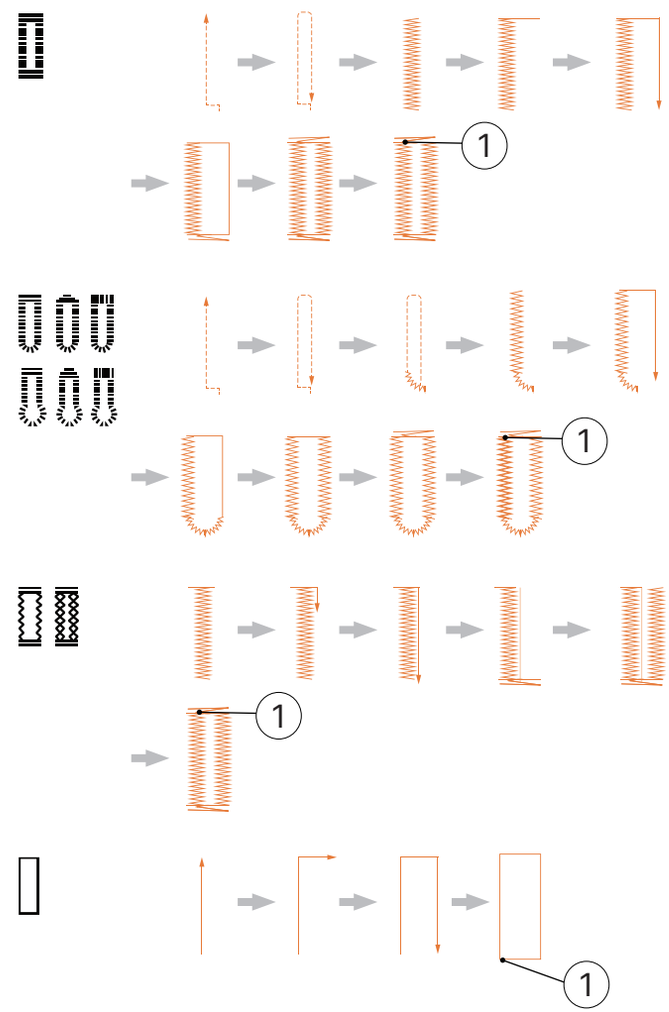

1. Reinforcement stitch

The part name of the buttonhole presser foot "A" used to create the buttonhole is shown in the figure below.

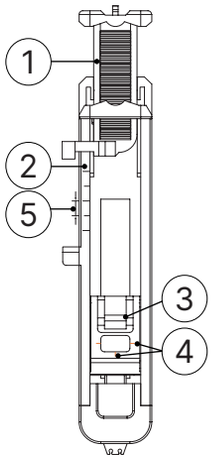

1. Button guide plate
2. Presser foot scale
3. Pin
4. Markings on the buttonhole presser foot
5. 5 mm / 0.19 in

A. Mark the position and length of the buttonholes on the fabric using chalk.

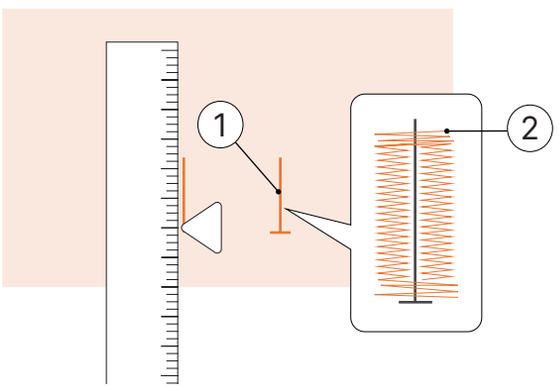

1. Markings on the fabric
2. Buttonhole sewing

B. Pull out the button guide plate of buttonhole presser foot "A", and then insert the button that you want to pass through the buttonhole.

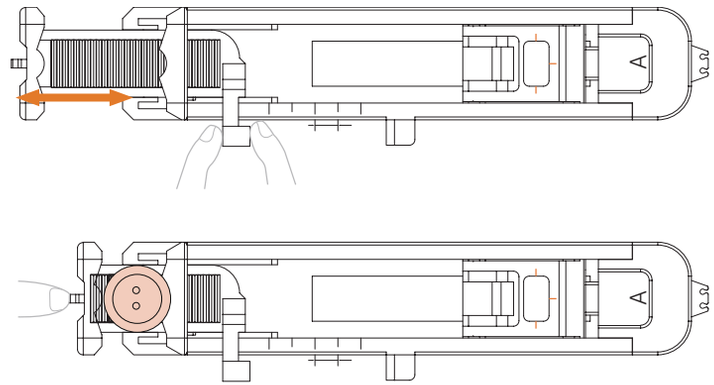

If the button does not fit in the button guide plate, add the diameter and thickness of the button, and then set the button guide plate to the calculated length.

(The distance between the marks on the presser foot scale is 5 mm.)

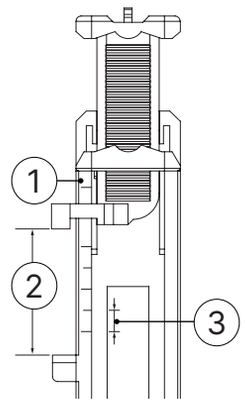

1. Presser foot scale
2. Buttonhole length (button diameter + thickness)
3. 5 mm / 0.19 in

Example: For a button with a diameter of 15 mm / 0.59 in and a thickness of 10 mm / 0.39 in, the button guide plate should be set to 25 mm / 0.98 in on the ruler.

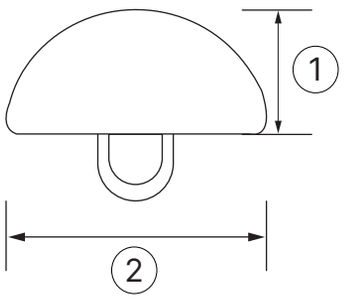

1. 10 mm / 0.39 in
2. 15 mm / 0.59 in

→ Set the size of the buttonhole.

C. Install buttonhole presser foot "A".

D. Select the stitch.

E. Place the fabric so that the front end of the buttonhole mark is aligned with the red marks on each side of the buttonhole presser foot, and then lower the presser foot lever.

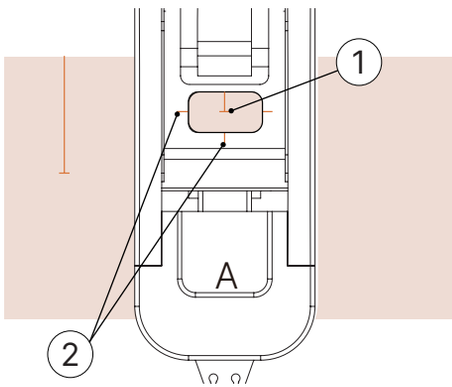

1. Markings on the fabric (front)
2. The red mark on the buttonhole presser foot

Thread the top thread down through the hole in the presser foot.

· When lowering the presser foot, do not push the front of the presser foot in.

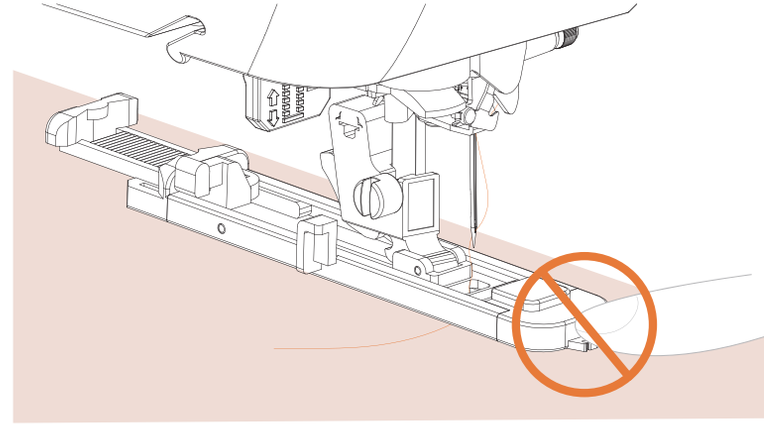

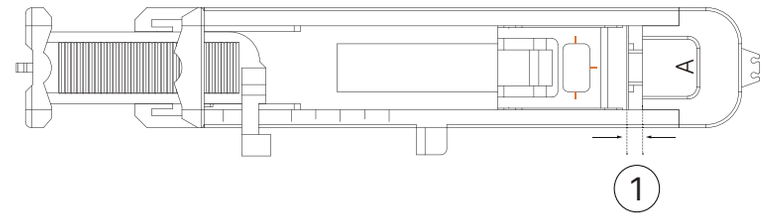

1. Do not reduce the gap.

F. Pull the toggle lever all the way down.

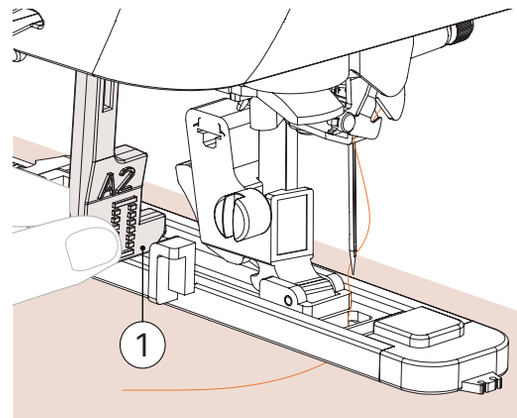

1. Toggle lever

The toggle lever is located behind the bracket on the toggle foot.

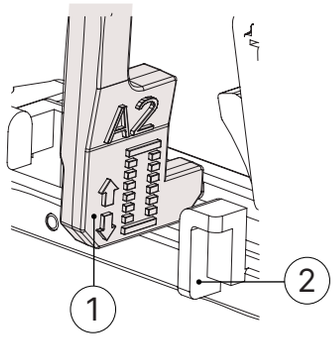

1. Toggle lever
2. Bracket

G. Gently grasp the end of the thread with your left hand, and then begin sewing.

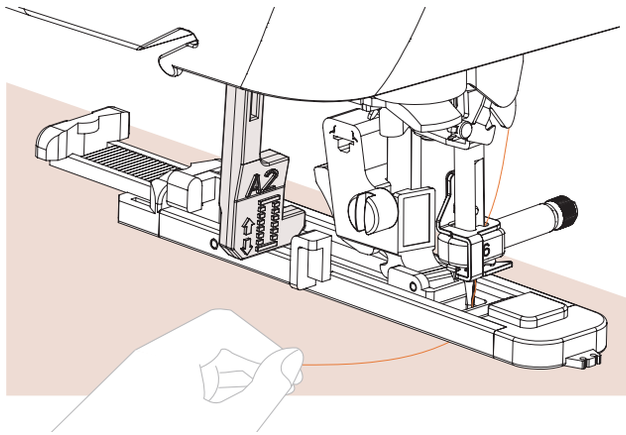

→ When sewing is complete, the sewing machine will automatically sew a reinforcing stitch and then stop.

H. Click the "Cut-off Knife" button once.

I. Lift the presser foot and remove the fabric.

Tips

· If the automatic thread cutting setting is selected before sewing, the machine will automatically cut the thread after sewing is completed. For details, please refer to "Automatic Thread Cutting" in the "Basic Operation" section.

· To cut the thread using the thread cutter on the left side of the machine or by using scissors, press the "Needle Position Button" to lift the needle, lift the presser foot, and then pull the fabric out before cutting the thread.

J. Raise the toggle lever back to its original position.

K. Insert a pin along the inside of a loop stitch at the end of the buttonhole stitch to prevent the stitch from being cut off.

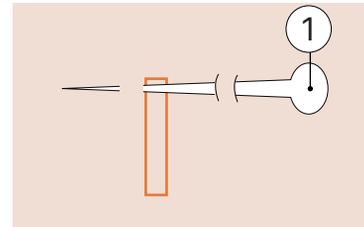

1. Pin

L. Use a seam ripper to cut towards the pin and open the buttonhole.

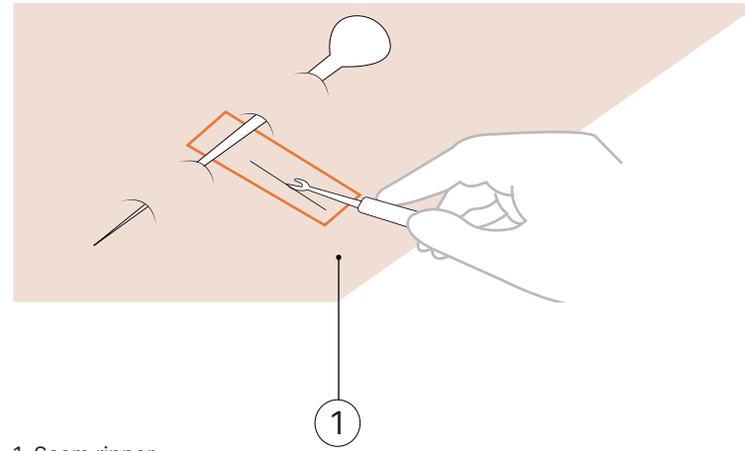

1. Seam ripper

For a buttonhole, use a hole punch to make a hole at the round end of the buttonhole, and then use a seam ripper to cut the buttonhole open.

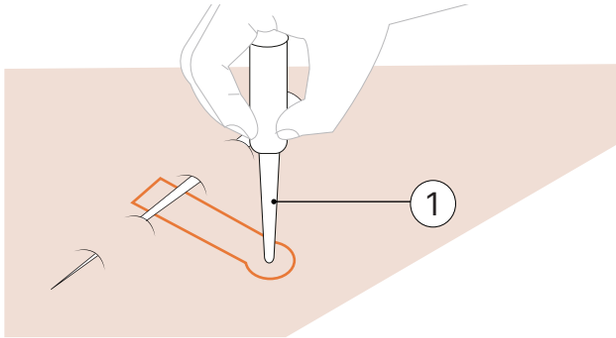

1. Hole punch

When using a hole punch, place thick paper or other protective paper under the fabric before punching holes in it.

Caution

· When cutting the buttonhole with a seam ripper, do not place your hand in the direction of the cut, otherwise the seam ripper may slip and cause injury.

· Do not use the seam ripper for purposes other than its intended use.

· Adjust the Stitch Length by Changing the Stitch Density

Adjust the stitch length.

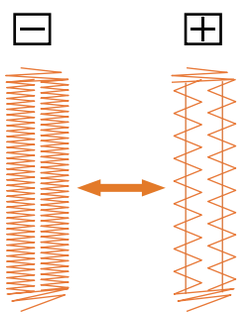

· For detailed information, see “Setting Stitch Length” in the “Basic Operations” section.

· If you cannot advance the fabric (e.g., the fabric is too thick), reduce the stitch density.

· Change Stitch Width

Adjust the stitch width.

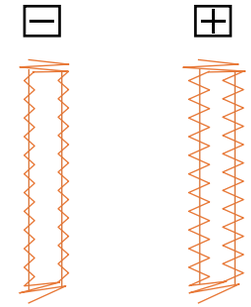

· For more information, see “Setting Stitch Width” in the “Basic Operations” section.

Tips

· Before sewing the buttonhole, first try sewing a buttonhole on a piece of scrap fabric to check the length and width of the stitches.

· Sewing Buttonholes into Stretch Fabric

When sewing buttonholes into stretch fabric, use velvet thread.

A. Hook the velvet thread onto part "A" of the buttonhole presser foot shown in the diagram.

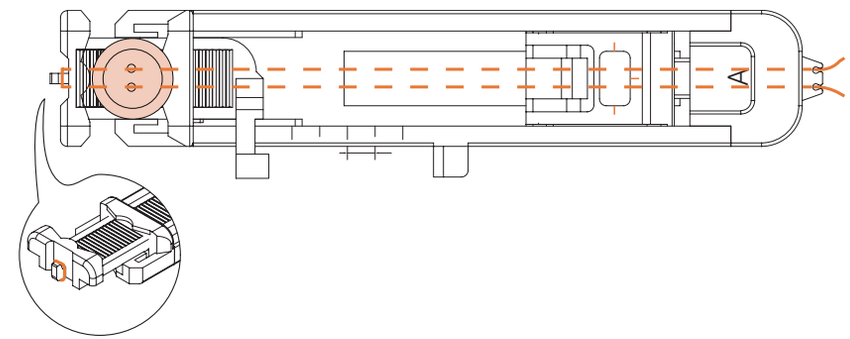

B. After the line passes through the groove, tie a loose knot to secure it.

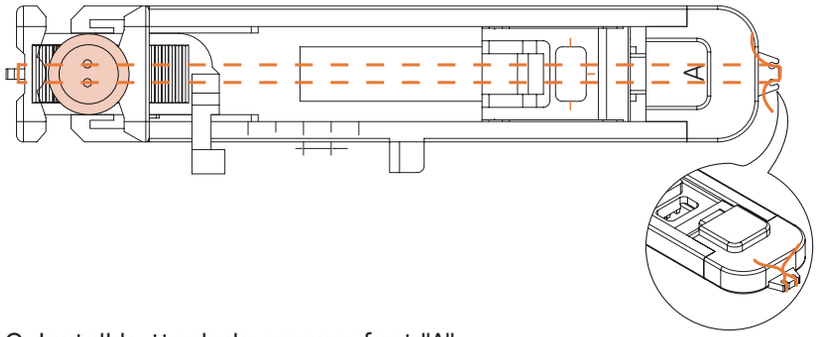

C. Install buttonhole presser foot "A".

D. Select stitch or .

E. Adjust the stitch width according to the thickness of the yarn.

F. Lower the presser foot lever and buttonhole lever, then begin sewing.

G. When the sewing is finished, gently pull out the thread to remove the excess thread.

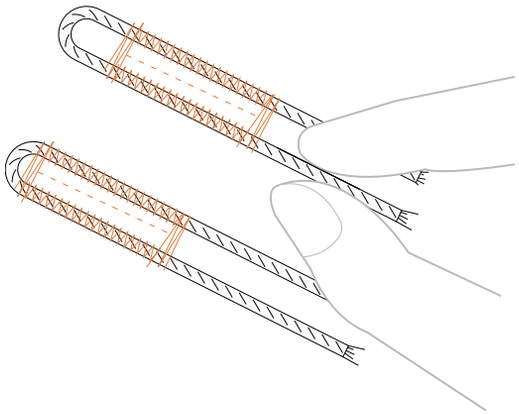

H. Use a hand sewing needle to pull the velvet thread to the reverse side of the fabric, then tie a knot to secure it.

Button Sewing

Buttons can be sewn with a sewing machine. Buttons with two or four holes can be sewn on.

A. Measure the distance between the holes where the buttons will be installed.

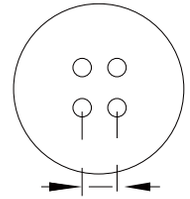

B. Lift the presser foot lever and slide the feed dog position switch located on the base at the rear of the machine in the direction (left when viewed from behind the machine).

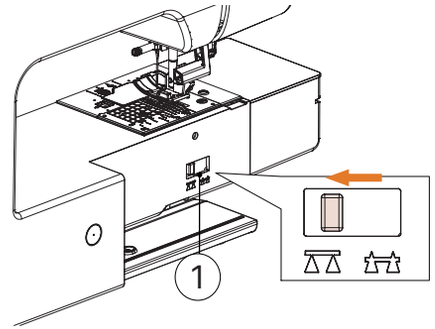

1. Feed dog position switch (viewed from the back of the sewing machine).

C. Install the button presser foot "M".

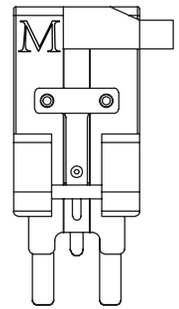

D. Select the stitch .

Do not program the sewing machine to cut the thread as the thread will come loose later.

E. Adjust the stitch width to be equal to the distance between the button holes.

F. Place the button where you want to sew, then lower the presser foot lever.

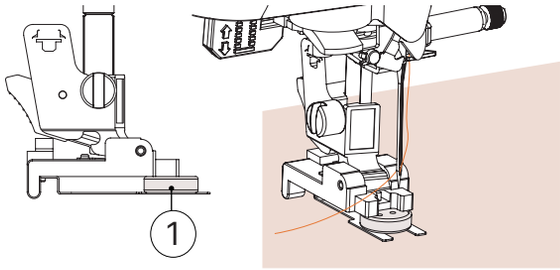

1. Button

· When installing a 4-hole button, sew the two holes closest to you first. Then, slide the button to allow the needle to enter the two holes facing the back of the sewing machine, and sew them in the same way.

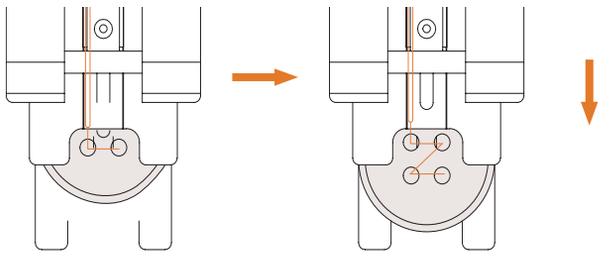

G. Turn the handwheel counter-clockwise towards yourself to check that the needle is correctly inserted into the two holes of the button.

If the needle appears to be about to touch the button, remeasure the distance between the holes in the button. Adjust the stitch width according to the distance between the buttonholes.

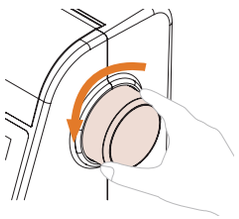

Caution

· When sewing, be careful not to let the needle touch the button, otherwise it may cause the needle to bend or break.

H. Start sewing. Set the sewing speed controller to the left (to slow down the speed).

The sewing machine will automatically stop when the reinforcement stitches are finished.

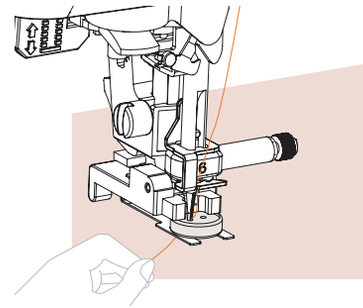

→ The sewing machine will automatically stop when the reinforcement stitches are finished.

· Do not click the "Cut-off Knife button".

I. Cut the bobbin thread and top thread at the beginning of the stitch with scissors.

Pull the top thread at the end of the stitch to the reverse side of the fabric, and then tie it with the bobbin thread.

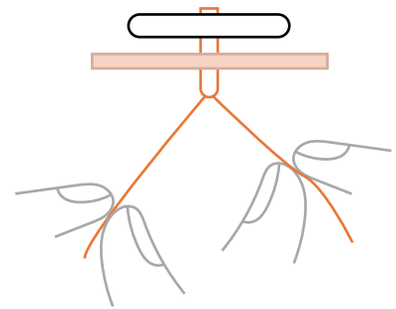

J. After sewing the button, slide the feed dog position switch to the right (when looking at the back of the sewing machine) and rotate the handwheel to raise the feed dog.

Tips

· The feed dog will rise when sewing resumes.

· Button Mounting Handle

To sew a buttonhole using the handle, attach the button between the handle and the fabric, then hand-wrap the thread. This will securely attach the button. Button up.

A. Place the button on the button presser foot "M", Pull the handle towards yourself.

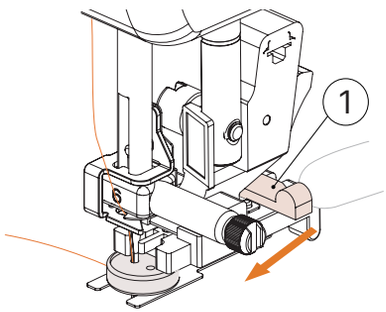

1. Handle

B. When sewing is complete, trim off any excess thread, wrap the thread between the button and the fabric, and then...

It is attached to the surface line at the beginning of the needle mark.

Tie the beginning of the stitch on the reverse side of the fabric to the end of the bobbin thread.

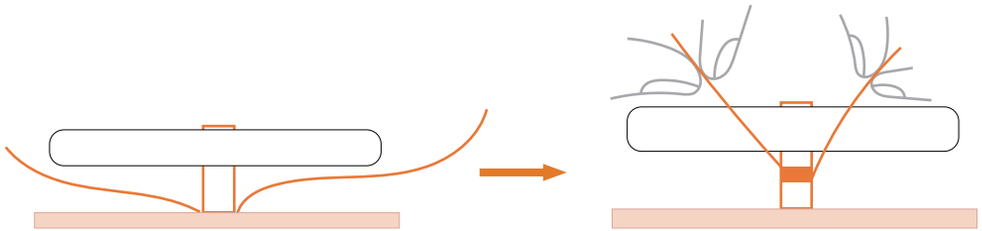

C. Trim off any excess thread.

Chapter 7 Install the zipper

· Use the table below and refer to the "Using" section of the "Basic Operations" section for practical instructions on "Sewing". "Stitch chart".

Stitch name	Needle marks	Stitch Number	Presser Foot
Straight Stitch (medium)		1-03	
Straight Stitch (left)		1-01	

* During the preset practical stitch mode, you can directly select the stitch pattern by pressing the number keys on the machine. Please refer to "Basic Operation".

Install Center Zipper

Stitches are made on the two pieces of fabric that are joined together.

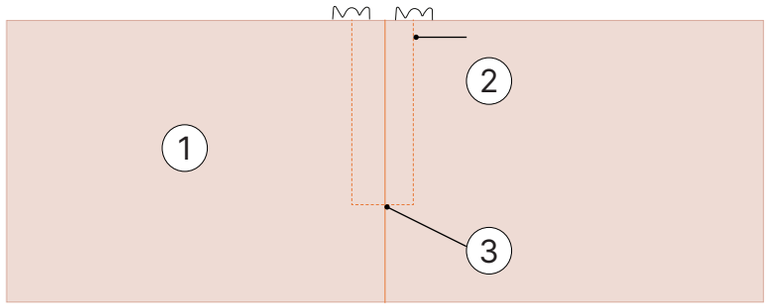

1. The right side of the fabric
2. Stitches
3. The end of the zipper opening

A. Install the curved presser foot "J".

B. Sew a straight stitch to the zipper opening.

With the right sides of the fabric facing each other, sew a reverse stitch after reaching the zipper opening.

C. Using a basting stitch, continue sewing towards the edge of the fabric.

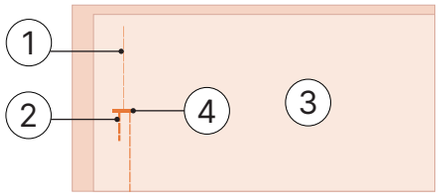

1. Bass stitch
2. Reverse stitch
3. The reverse side of the fabric
4. The end of the zipper opening

D. Open the seam from the reverse side of the fabric.

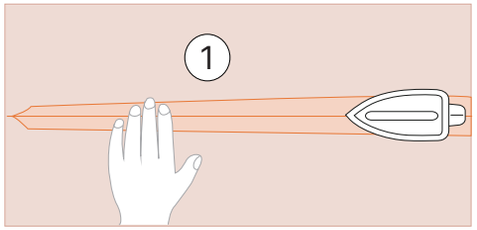

1. The reverse side of the fabric

E. Align the seam with the center of the zipper, and then bast-sew the zipper onto the fabric.

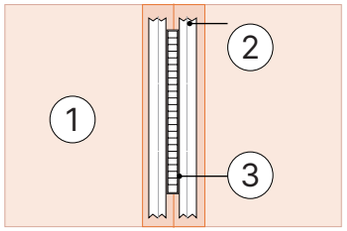

1. The reverse side of the fabric
2. Loose stitches
3. Zipper

F. Remove approximately 5 mm / 0.19 in from the end of the outer slit.

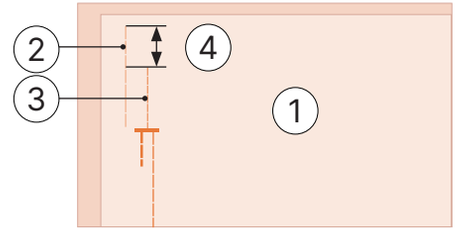

1. The reverse side of the fabric
2. Zipper basting
3. Loose stitching on the outer side
4. 5 mm / 0.19 in

G. Install the presser foot bracket on the right pin of the zipper presser foot "I".

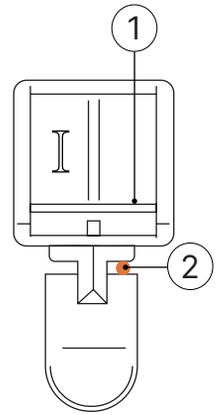

1. The pin on the right side
2. Needle drop point

H. Select the stitch.

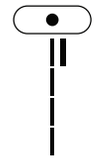

Caution

· When using the zipper foot "I", be sure to select a straight stitch (center needle position), and then slowly rotate the handwheel in your direction (counter-clockwise) to check if the needle touches the presser foot. Selecting a different stitch or if the needle touches the presser foot may cause the needle to bend or break.

I. Sew a top stitch around the zipper.

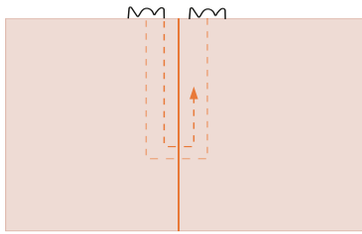

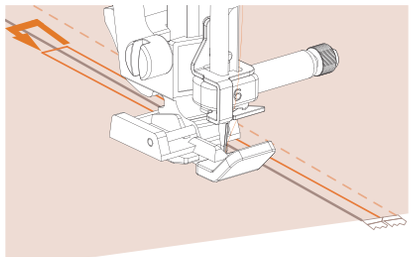

1. Stitches
2. The right side of the fabric.
3. Bass stitches.
4. The end of the zipper opening.

Caution

· When sewing, be careful not to let the needle touch the zipper, otherwise it may cause the needle to bend or break.

J. Remove the basting stitches.

Install Side Zipper

The stitches are visible only on one piece of fabric. Use this zipper application for side and back openings.

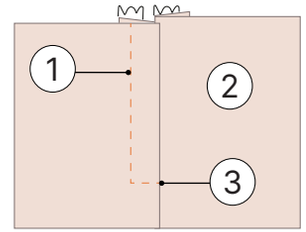

1. Stitches
2. The right side of the fabric
3. The end of the zipper opening

As shown in the figure, the following steps describe how to sew stitches on the left side.

A. Install the curved presser foot "J".

B. Sew a straight stitch to the zipper opening.

With the right sides of the fabric facing each other, sew a reverse stitch after reaching the zipper opening.

C. Using a basting stitch, continue sewing towards the edge of the fabric.

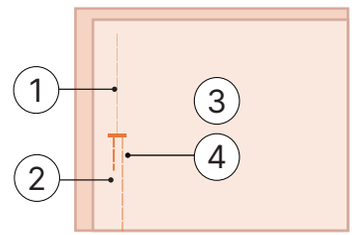

1. Bass stitch
2. Reverse stitch
3. The reverse side of the fabric
4. The end of the zipper opening

D. Open the seam from the reverse side of the fabric.

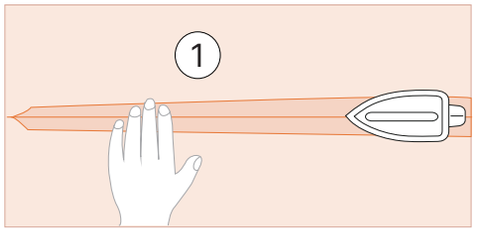

1. The reverse side of the fabric

E. Press the seam allow the right side (the side without stitches) to extend 3 mm / 0.11 in beyond the seam allowance.

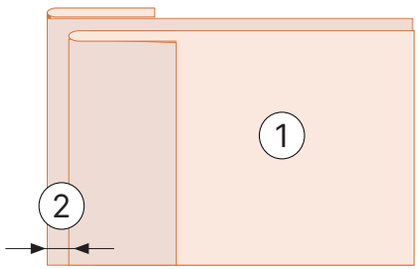

1. The reverse side of the fabric
2. 3 mm / 0.11 in

F. Align the zipper teeth with the 3mm excess fabric edge, then baste or nail the zipper in place.

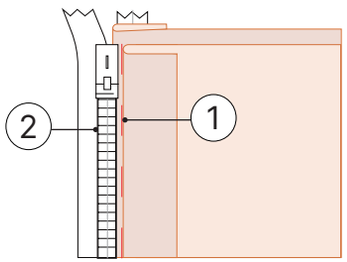

1. Zipper teeth
2. Basting stitches

G. Install the presser foot bracket on the right pin of the zipper presser foot "I".

If sewing the zipper on the right side, install the presser foot bracket on the left pin of the zipper presser foot.

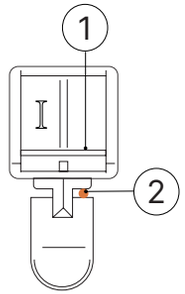

1. The pin on the right side.
2. The point where the needle drops.

H. Select the stitch.

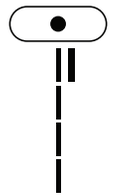

Caution

· Use the zipper foot "I" to slowly turn the handwheel (counter-clockwise) to check if the needle touches the presser foot. Selecting a different stitch or if the needle touches the presser foot may cause the needle to bend or break.

I. Sew the zipper onto the fabric that extends 3 millimeters beyond the zipper, starting from the bottom of the zipper.

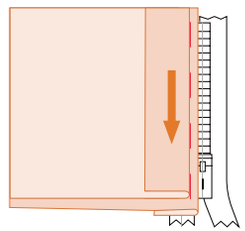

J. When the needle is about 5 cm from the end of the zipper, stop the sewing machine and raise the presser foot lever.

K. Unzip the zipper and continue sewing.

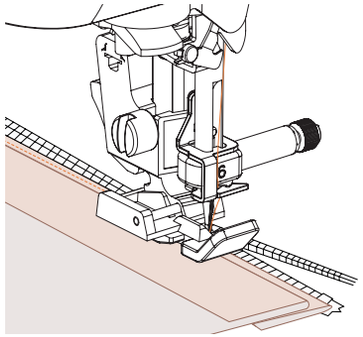

L. Close the zipper, turn the fabric over, and then bast-sew the other side of the zipper onto the fabric.

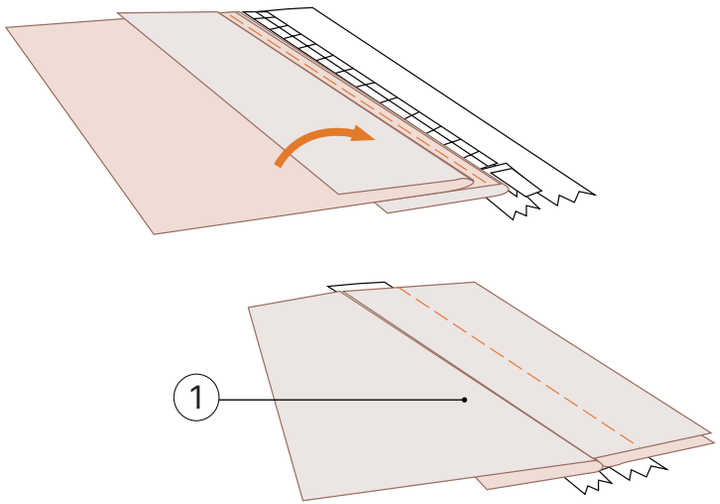

1. Loose stitches

M. Install the presser foot bracket onto the other pins of the zipper presser foot "I".

If the presser foot bracket was installed on the right pin in step G, change it to the left pin.

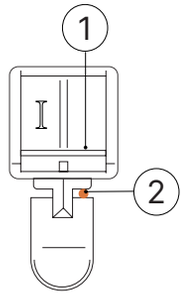

1. The pin on the right side.
2. The point where the needle drops.

N. Sew a top stitch around the zipper.

Sew a reverse stitch at the end of the zipper opening and align the zipper teeth with the presser foot side.

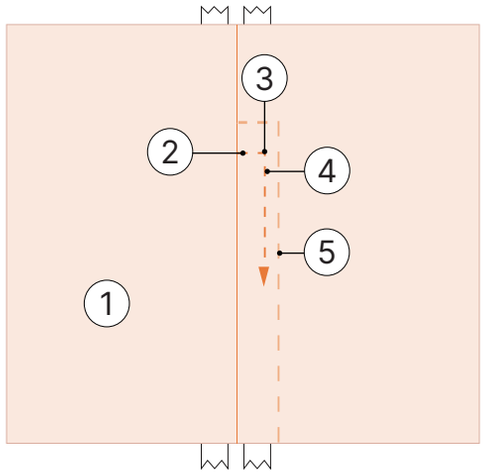

1. The right side of the fabric
2. The end of the zipper opening
3. Reverse stitch
4. The beginning of the stitch
5. Basting stitch

⚠ Caution

· When sewing, be careful not to let the needle touch the zipper, otherwise it may cause the needle to bend or break.

O. Stop sewing when the needle is lowered (into the fabric) about 5 cm / 1.9 in from the end of the zipper. Then lift the presser foot lever.

P. Remove the basting stitches, open the zipper, and then continue sewing.

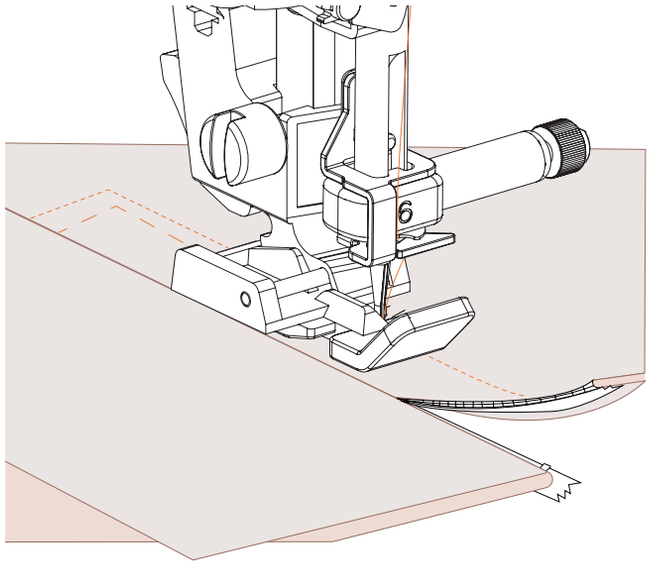

Chapter 8 Sewing Stretch Fabric and Elastic Bands

Use the table below and refer to the "Practical Stitch Table" introduced in the "Sewing" section of the "Basic Operations" section.

Stitch Name	Needle Marks	Stitch Number	Presser Foot
Straight Needle Stitch		1-06	J
2 Sections of Zigzag Stitches		1-13	
3 Sections of Zigzag Stitches		1-14	
Installation Tape Stitches		2-13	

Extendable Stitch

A. Install the curved presser foot "J".

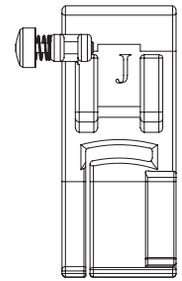

B. Select the stitch.

C. Sewing fabric without it stretching or shrinking.

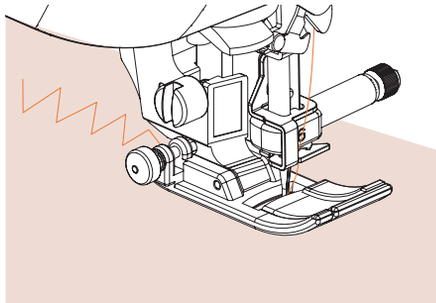

Install Elastic Band

When attaching elastic bands to the cuffs or waist of a garment, the finished size will be the size of the stretched elastic band. Therefore, it is essential to use elastic bands of the appropriate length.

A. Tuck the elastic band to the reverse side of the fabric.

Secure the elastic band to several points on the fabric, ensuring it is evenly distributed.

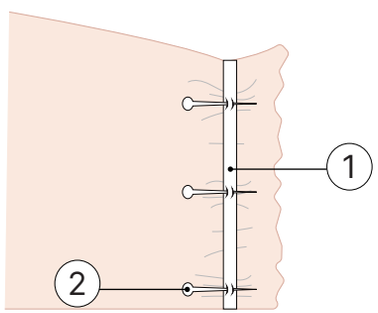

1. Elastic band
2. Pins

B. Install the curved presser foot "J".

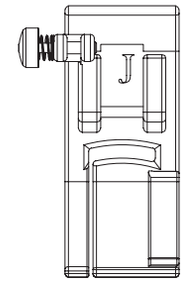

C. Select the stitch.

D. Straighten the elastic band to the same length as the fabric, and sew the elastic band onto the fabric.

Pull the fabric behind the presser foot with your left hand, and at the same time pull the fabric in front of the presser foot at the point closest to the pin with your right hand.

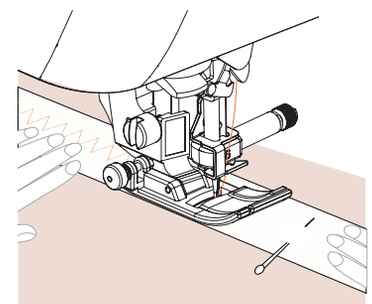

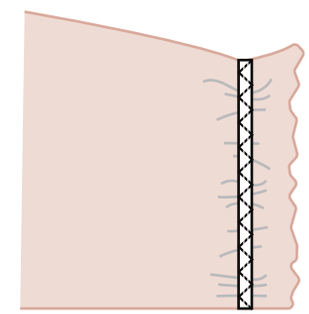

Caution

· When sewing, be careful not to let the needle touch any pins, otherwise it may cause the needle to bend or break.

Chapter 9 Joining and Quilting Stitches

Use the table below and refer to the "Basic Operations" section for the practical needles described in the "Sewing" section. "Traces".

Stitch Name	Stitch	stitch Number	Presser Foot
Twisted Needle Marks		1-09	J
Quilted Appliqué Embroidery With Zigzag Stitches		1-33	
Overlock Stitches on The Edge of The Blanket		2-03	
Stitching (Right)		1-34	
Stitching (Middle)		1-29	
Stitching (Middle)		1-30	
Stitching (Left)		1-31	
Splicing Stitches		2-07	
Double-Needle Overlock Stitch		2-08	
Embroidery Stitches		2-09	
Imitation Hand-Quilted Stitches		1-32	
Quilted Dot Stitch		1-35	

Patchwork (Irregular Quilting) Stitches

A. Fold the top edge of the fabric over the bottom edge.

B. Sew the two pieces of fabric together so that the pattern spans across both pieces.

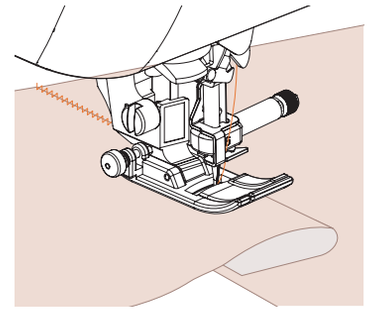

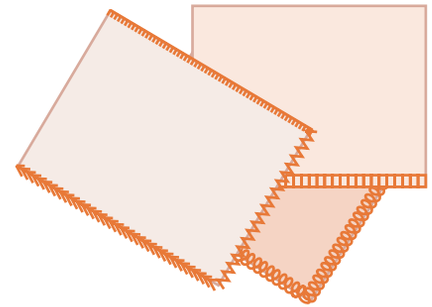

Splicing

Sew two pieces of fabric together; this is called "sewing ". 6.5 mm / 0.26 in seam allowance should be cut off from the fabric.Sew a straight stitch 6.5 mm / 0.26 in to the right or left of the presser foot.

A. Baste or splice the seams of the fabric to be spliced along the seam.

B. Install the curved presser foot "J".

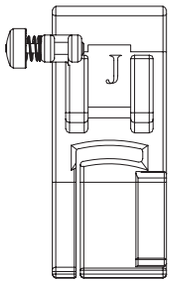

C. Select stitch 1-29 or 1-31.

D. Align the presser foot edge with the fabric edge and sew.

· For the Seam Edge on the Right Side

Align the right side of the presser foot with the edge of the fabric and sew using stitch 1-29.

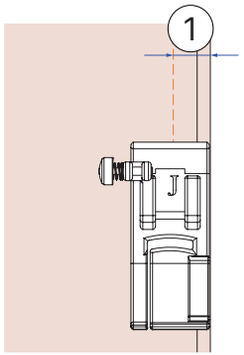

1. 6.5 mm / 0.27 in

· For the Seam Edge on the Left Side

Align the left side of the presser foot with the edge of the fabric and sew using stitch 1-31.

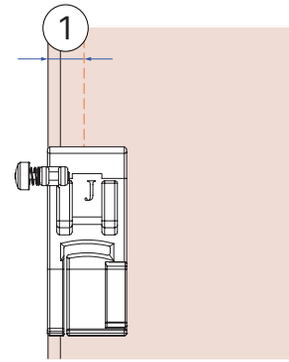

1. 6.5 mm / 0.27 in

Tips

· To change the width of the seam (needle position), adjust the stitch width. For details, see "Setting the Stitch Width" in the "Basic Operations" section.

Satin Stitch Using a Sewing Speed Controller

Decorative stitches can be sewn by changing the stitch width of a satin stitch. If the sewing machine is set to allow adjustment of the stitch width using a sewing speed controller, the stitch width can be adjusted quickly and easily.

In this case, the foot pedal controller is used to adjust the sewing speed.

A. Connect the foot pedal controller.

B. Install the curved presser foot "J".

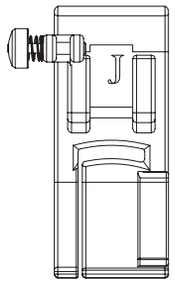

C. Click to display the settings screen and set "Width Control" to "ON".

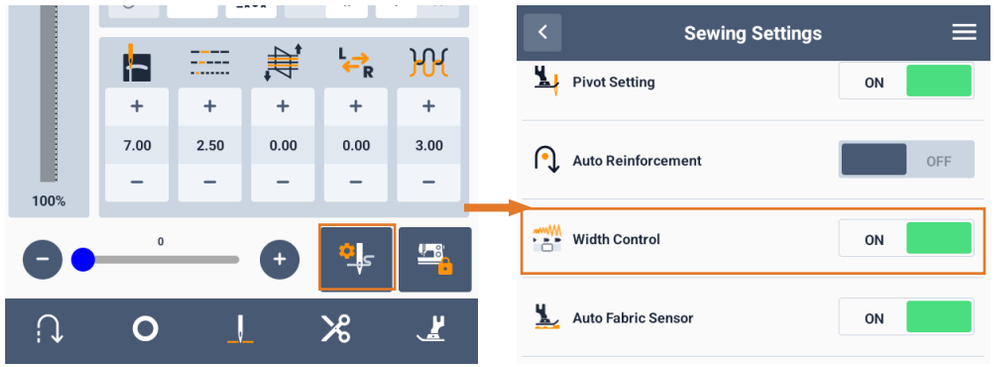

D. Click to return to the homepage.

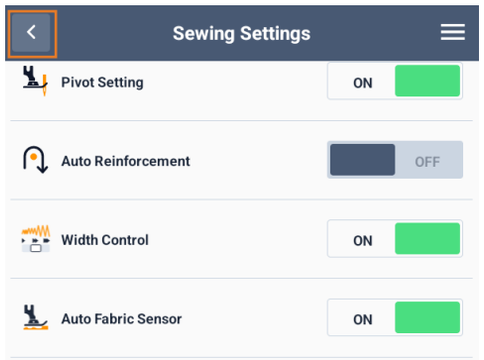

→ Now you can configure the sewing machine so that the stitch width can be controlled using the sewing speed controller.

E. Select stitches 1-33.

F. When sewing, slide the sewing speed controller to adjust the stitch width.

Slide the controller to the left to make it narrower. Slide the controller to the right to make it wider.

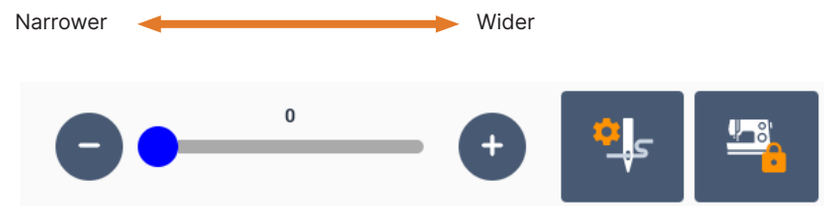

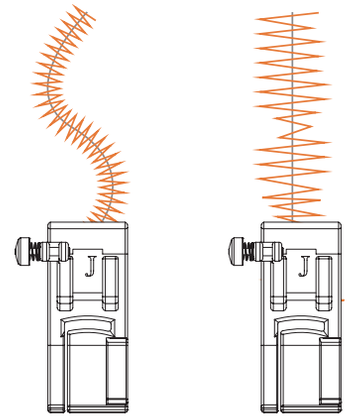

· Use a foot pedal controller to adjust the sewing speed.

Tips

· Although the sewing results vary depending on the type of fabric and the thickness of the thread used, for best results, please... Adjust the stitch length to between 0.3 and 0.5 mm / 0.01 and 0.02 in .

Chapter 10 Reinforce the Stitches

Reinforce areas prone to wear and tear, such as armholes, inner seams, and pocket corners.

Use the table below and refer to the "Basic Operations" section for the practical needles described in the "Sewing" section."Traces".

Stitch Name	Needle Marks	Stitch Number	Presser Foot
Triple Stretch Stitch		1-05	**J**
Bark Stitch		4-13	**A**
Mending Stitches		4-11	
		4-12	

Triple Stretch Stitch

The armholes and inner seams are reinforced with triple stretch stitches.

A. Install the curved presser foot "J".

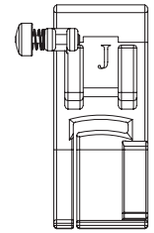

B. Select the stitch.

C. Begin sewing.

Bark Stitch

Bark stitches are used to reinforce areas prone to wear and tear, such as pocket corners and openings.

As an example, the steps for sewing a bar knot at the corner of a pocket are described below.

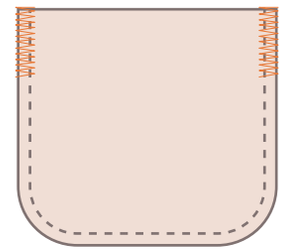

A. Determine the required length of the loop stitch.

Set the button guide plate on the buttonhole presser foot "A" to the desired length. (The distance between the marks on the presser foot scale is 5 mm / 0.19 in.)

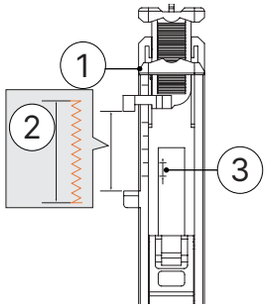

1. Presser foot scale
2. Length of the bark stitch
3. 5 mm / 0.19 in

·The longest possible bark stitch is approximately 28 mm / 1.10 in.

B. Install buttonhole presser foot "A".

C. Select the stitch.

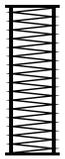

D. Place the fabric so that the pocket opening faces you, then lower the presser foot lever so that the needle is 2 mm / 0.07 inch in front of the pocket opening.

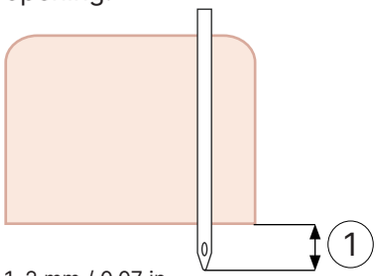

1. 2 mm / 0.07 in

Pass the top thread downwards through the hole in the presser foot.

· When lowering the presser foot, do not push the front end of the presser foot forward, otherwise the correct size bar stitch will not be sewn.

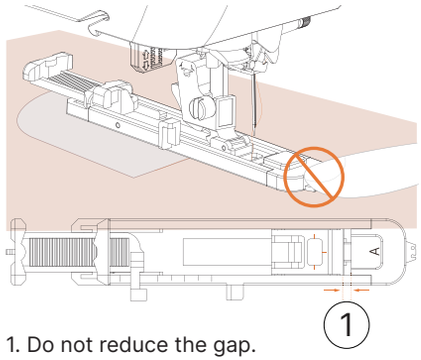

1. Do not reduce the gap.

E. Pull the toggle lever down to the bottom.

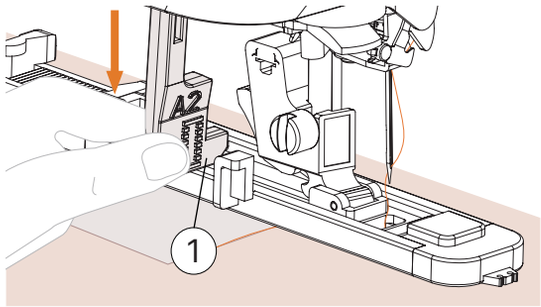

1. Toggle lever

· The buttonhole lever is located behind the bracket on the buttonhole presser foot.

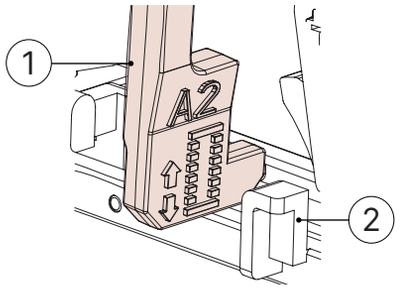

1. Button hole lever
2. Bracket

F. Gently grasp the end of the thread with your left hand, and then begin sewing.

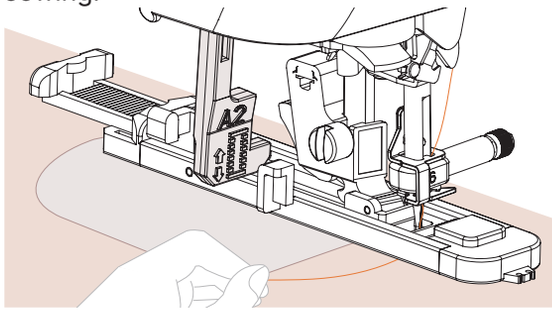

G. Lift the presser foot lever, remove the fabric, and then cut the thread.

H. Raise the toggle lever back to its original position.

Tips

· If you cannot advance the fabric, for example, if the fabric is too thick, increase the stitch length. For more information, see "Setting Stitch Length" in the "Basic Operations" section.

Darning

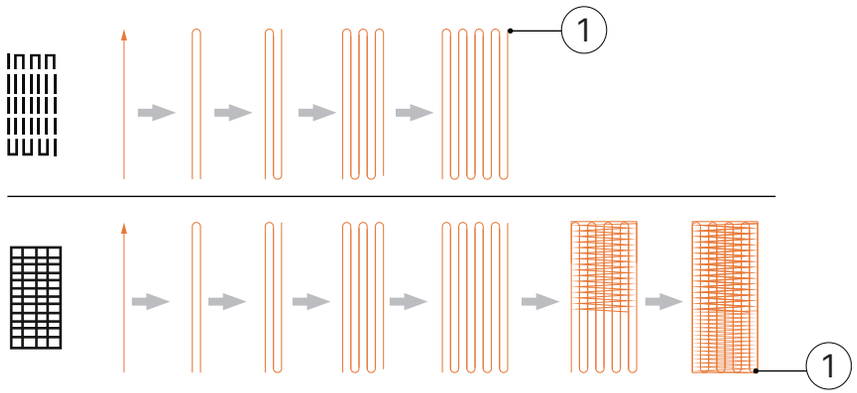

1. Reinforce stitches

A. Determine the required length for the patch.

Set the button guide plate on the buttonhole presser foot "A" to the desired length. (The distance between the marks on the presser foot scale is 5 mm / 0.19 in.)

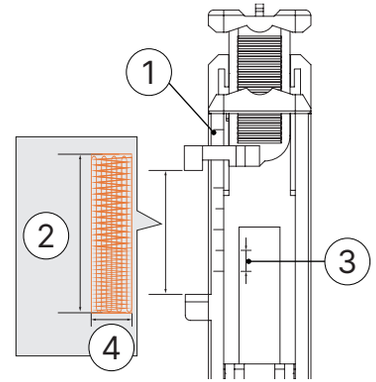

1. Presser foot scale
2. Length of the patch
3. 5 mm / 0.19 in
4. 7 mm / 0.28 in

·The longest loop stitch that can be sewn is approximately 28 mm / 1.10 in.

→ When sewing is complete, the sewing machine will automatically sew a reinforcing stitch and then stop.

B. Install buttonhole presser foot "A".

C. Select stitch or

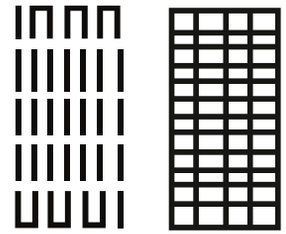

D. Place the fabric so that the needle is 2 mm / 0.07 inch in front of the area to be grouted.

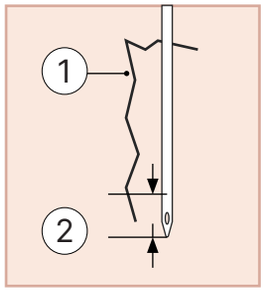

1. Tear
2. 2 mm / 0.07 in

Pass the top thread downwards through the hole in the presser foot, then lower the presser foot.

· When lowering the presser foot, do not push the front end of the presser foot forward, otherwise the patch will not be sewn to the correct size.

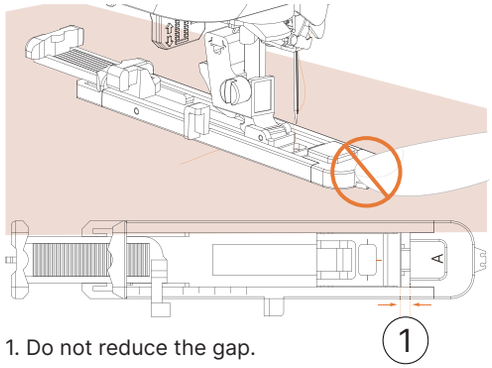

1. Do not reduce the gap.

E. Pull the toggle lever down to the bottom.

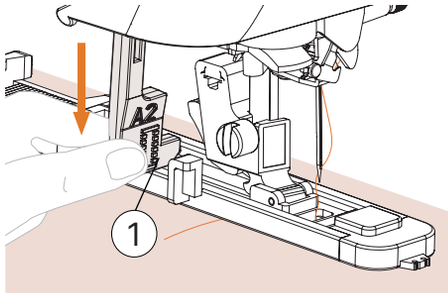

1. Toggle lever

· The buttonhole lever is located behind the bracket on the buttonhole presser foot.

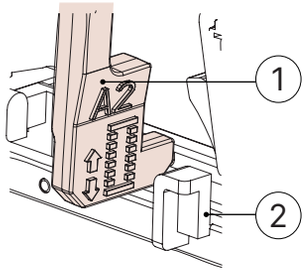

1. Toggle lever
2. Bracket

F. Gently grasp the end of the thread with your left hand, and then begin sewing.

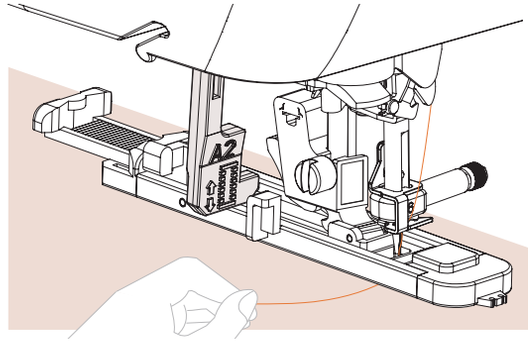

G. Lift the presser foot lever, remove the fabric, and then cut the thread.

H. Raise the toggle lever back to its original position.

Tips

· If you cannot advance the fabric, for example, if the fabric is too thick, increase the stitch length. For more information, see "Setting Stitch Length" in the "Basic Operations" section.

Chapter 11 Chrysanthemum-Shaped Needle Marks

You can sew chrysanthemum eyes onto the strap.

Use the table below and refer to the "Basic Operations" section for the practical needles described in the "Sewing" section. "Trace table".

Stitch Name	Needle Marks	Stitch Number	Presser Foot
Chrysanthemum-Shaped Needle Marks		4-15	**N**

A. Install the interlaced letter presser foot "N".

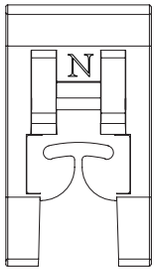

B. Select the stitch .

C. Adjust the stitch width or stitch length to select the desired chrysanthemum eye size.

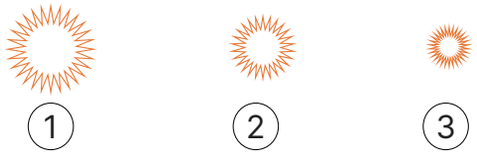

① 7 mm / 0.27 in ② 6 mm / 0.23 in ③ 5 mm / 0.19 in

· For more information, please see “Setting Stitch Width” and “Setting Stitch Length” in the “Basic Operations” section.

D. Lower the needle into the fabric at the beginning of the stitch, then lower the presser foot lever.

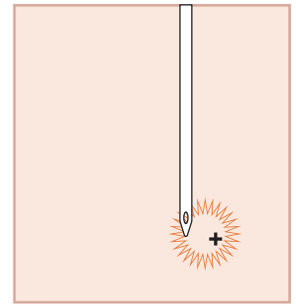

E. Begin sewing.

→ When sewing is complete, the sewing machine will automatically sew a reinforcing stitch and then stop.

F. Use a hole punch to cut a hole in the center of the anus.

→ When using a hole punch, please place thick paper or other protective paper under the fabric first.

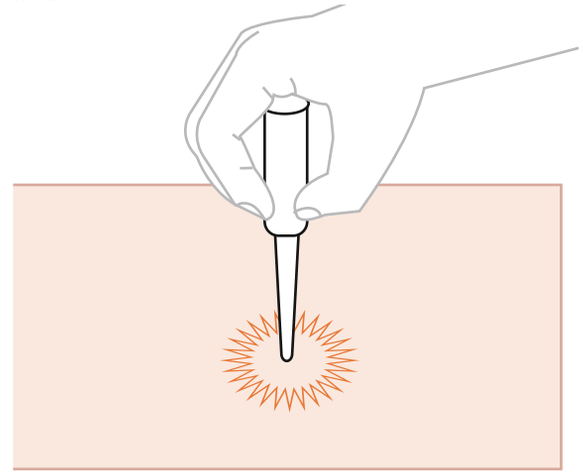

Tips

· If using fine thread, the stitches may be too open. If this happens, sew the eye of the needle before removing the fabric. Twice, one is sewn onto the other.

Chapter 12 Decorative Stitches

Practical stitches include the following decorative stitches.

Use the table below and refer to the "Basic Operations" section for the practical needles described in the "Sewing" section. "Trace table".

Stitch Name	Needle Marks	Stitch Number	Presser Foot
Stitching		2-07	J
Double-Needle Overlock Stitch		2-08	
Embroidery Stitches		2-09	
Seashell Edge Stitches		2-04	
Decorative Stitches in Garment Folds		2-10	
Feathered Needle Marks		2-11	
Fancy Cross-Stitch Stitches		2-12	
Satin Fan Stitch		2-05	N
Folding Stitches		3-04	

Stitch Name	Needle Marks	Stitch Number	Presser Foot
Folding Stitches	3-06		N
	3-09		
	3-10		
Honeycomb Stitches	3-12		
Folding Stitches	3-18		
	3-20		
	3-21		
	3-22		
Trapezoidal Needle Marks	2-14		J
Lotus leaf Needle Marks	2-15		
Decorative Stitches	2-16		
Snake-like Needle Marks	2-17		N

Fancy Stitches

A stitch that crosses an open seam is called a "fancy stitch." Fancy stitches are used on women's blouses and children's clothing. The decorative effect of this stitch is more pronounced when using thicker thread.

A. Use an iron to fold and iron along the seams of the two pieces of fabric.

B. Separate the two pieces of fabric by about 4 mm / 0.13 in and bast-sew them onto thin paper or water-soluble backing paper.

It will be easier to sew if you draw a line along the middle of the tissue paper or water-soluble liner.

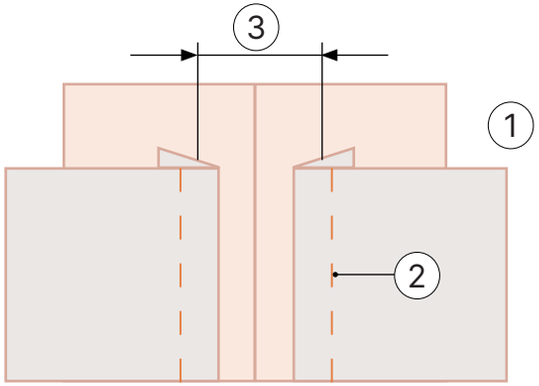

1. Thin paper or water-soluble backing paper
2. Spacing stitches
3. 4 mm / 0.13 in

C. Install the curved presser foot "J".

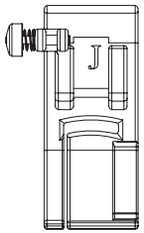

D. Choose the stitch or .

E. Set the stitch width to 7.0 mm / 0.27 in.

F. Align the center of the presser foot with the center of the two pieces of fabric and sew.

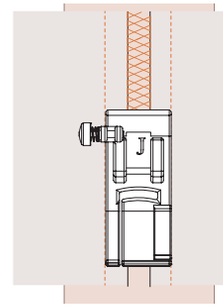

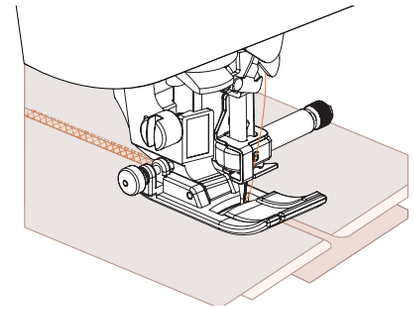

G. Once sewing is complete, remove the paper.

The Fan Stitch

wave-like repeating pattern resembling a seashell, is called the "fan stitch." This stitch is used on the collar of women's blouses or to decorate the edges of clothing.

A. Install the interlaced letter presser foot "N".

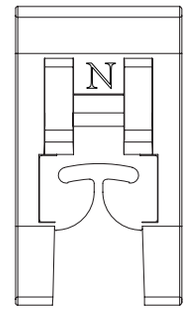

B. Select the stitch .

C. Sew along the edge of the fabric, but make sure not to sew directly on the edge of the fabric.

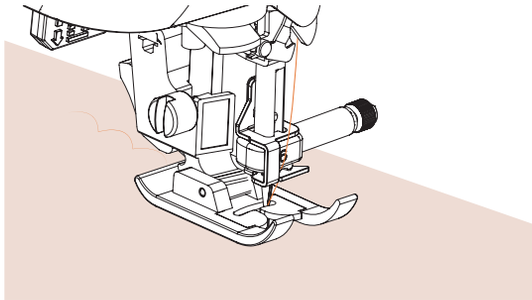

· To achieve better results, sizing the fabric and ironing it with a hot iron before sewing.

D. Clothing pleat decoration

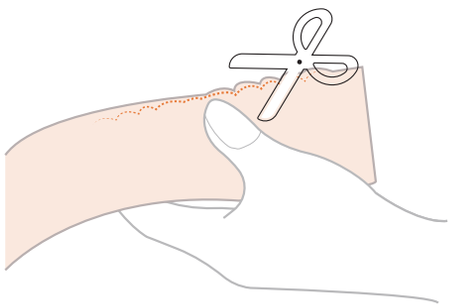

·Be careful not to cut the stitches.

Clothing Pleat Decoration

Decorative stitches created by sewing or embroidering on pleats are called "pleat decorations." These stitches are used to decorate the front or cuffs of women's shirts.

Decorative stitches in pleats add texture and elasticity to fabric.

A. Install the curved presser foot "J".

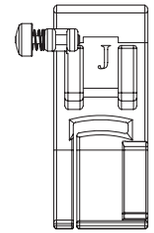

B. Select a straight stitch, then adjust the stitch length to 4.0 mm / 0.15 in and loosen the thread tension.

· For detailed information, see “Setting Stitch Length” and “Setting Thread Tension” in the “Basic Operations” section.

· For detailed information, see “Pulling Up the Bobbin Thread” in the “Basic Operations” section.

C. Sew parallel stitches at 1 cm / 0.39 in intervals.

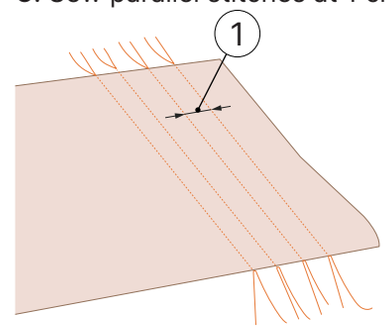

1. 1 cm / 0.39 in

·Do not use reverse/reinforced stitches or cut stitches

·At the end of the stitch, pull the thread out about 5 cm.

D. Pull up the bobbin thread to create wrinkles in the fabric.

Iron the wrinkles to flatten them.

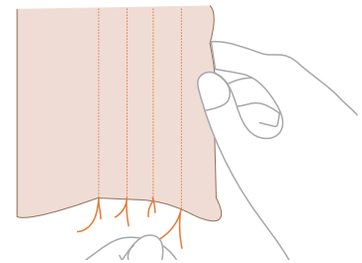

E. Choose stitch, or .

F. Sew between straight stitches.

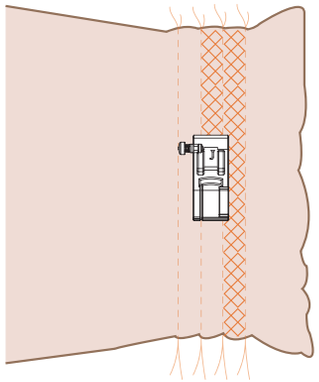

G. Draw a straight stitch.

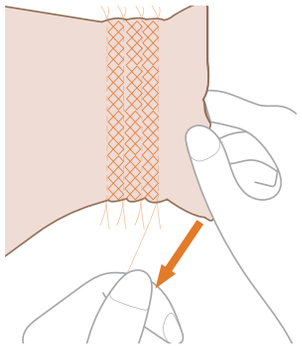

Seashell Edge Stitches

The seashell-like folds are called "shell edging stitches." They are used to decorate ornaments, the front of thin fabric blouses, or the cuffs.

A. Fold the fabric along the offset line.

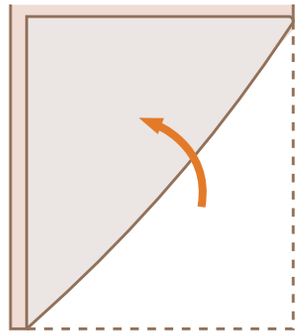

B. Install along the curved presser foot "J".

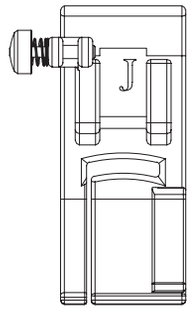

C. Select the stitch , then increase the thread tension.

D. Sew with the needle slightly off the edge of the fabric.

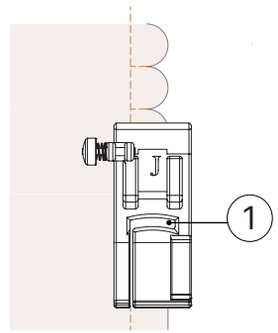

1. Needle drop point

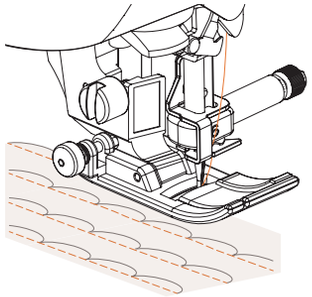

E. Unfold the fabric and iron it to one side.

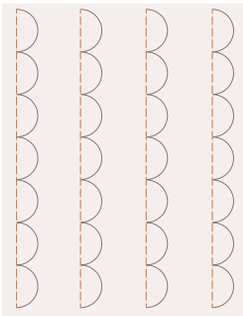

Splicing

Decorative bridging stitches can be sewn along the seams of joined fabrics. This stitch is used when performing irregular quilting.

A. Install the curved presser foot "J".

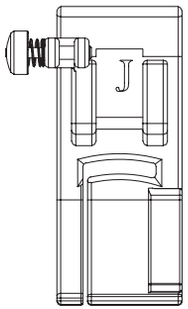

B. Sew the right sides of the two pieces of fabric together, then open the seam.

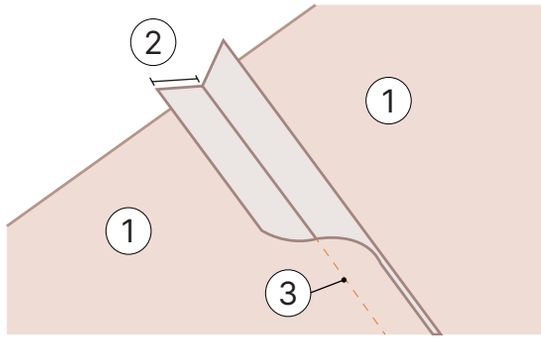

1. Wrong side of the fabric
2. 7 mm / 0.27 in seam allowance
3. Straight stitches

C. Select stitch 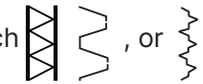 , or .

D. Turn the fabric over so that the right side is facing up, then align the center of the presser foot with the seam edge and sew along the seam.

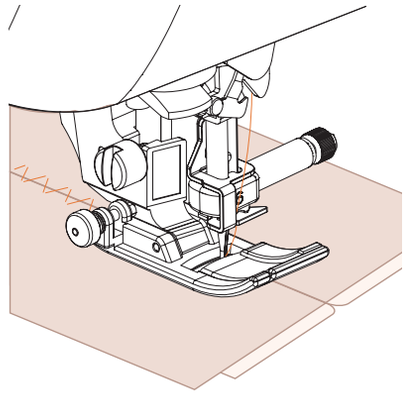

1. The right side of the fabric

Hereditary Needle Marks

When using a winged needle, the large eye creates a decorative stitch effect similar to lace. Besides ordinary fabrics, this stitch is also used to decorate folds in thin or medium-weight fabrics and tablecloths.

A. Insert the wing pin.

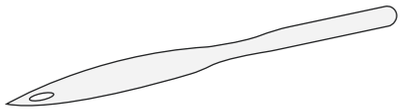

· Use a 130 / 705H 100 / 16 winged needle.

· For detailed information on needle installation, see “Changing the Needle” in the “Basic Operation” section.

· Do not use a threader with the winged needle, as this may damage the sewing machine. Thread the thread manually from front to back through the needle eye. For details, see “Manual Threading (Without a Threader)” in the “Basic Operation” section.

B. Install the interlaced letter presser foot "N".

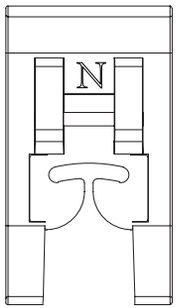

C. Select the stitch.

The stitches that can be used are 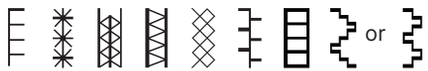 or .

When using winged needles, please select a stitch width of 6.0 mm / 0.23 in or less.

D. Begin sewing.

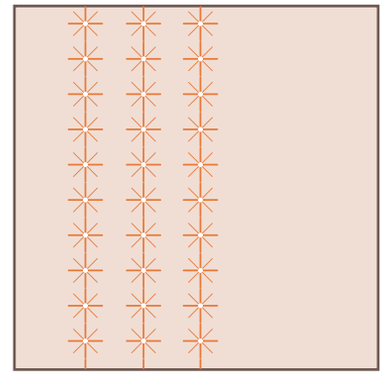

⚠ Caution

· When using a winged needle, please select a stitch width of 6.0 mm or less; otherwise, it may result in bent or broken needles.

· After adjusting the stitch width, slowly turn the handwheel counter-clockwise towards yourself to check if the needle touches the presser foot. If the needle touches the presser foot, it may bend or break.

Partially removing the thread is called "drawing stitch." This makes loosely woven fabrics look more beautiful.

The following describes two methods for creating drawnwork.

· Drawstring embroidery (Example 1)

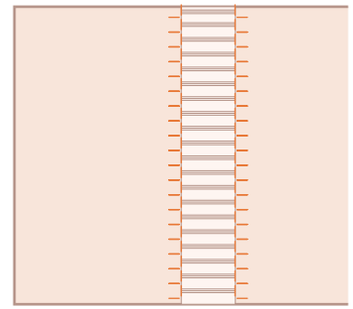

A. Pull out several threads from the fabric.

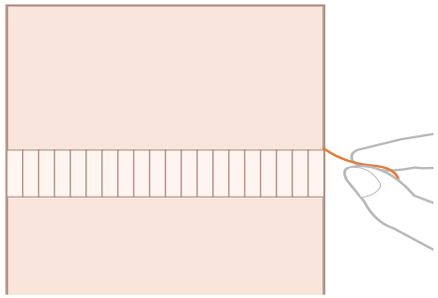

B. Install the interlaced letter presser foot "N".

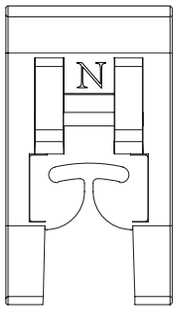

C. Select the stitch .

D. When the right side of the fabric is facing up, sew along the right side of the worn area.

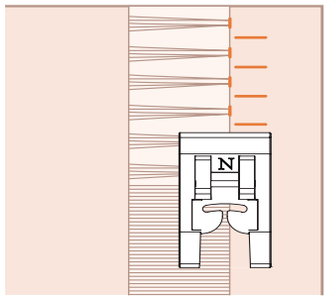

E. Click the mirror button.

· For more information, please see “Mirror Stitches” in the “Basic Operations” section.

→ The pattern displayed on the screen will be mirrored.

F. Sew along the other side of the worn area so that it looks the same as the stitches on the front.

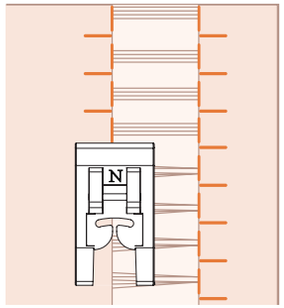

G. Press the mirror button again to return to normal mode.

· Drawstring embroidery (Example 2)

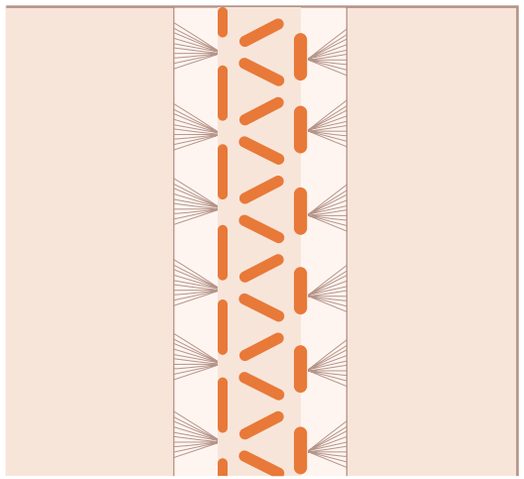

A. Pull out several threads from two parts of the fabric, leaving an unworn section approximately 4 mm / 0.15 in apart.

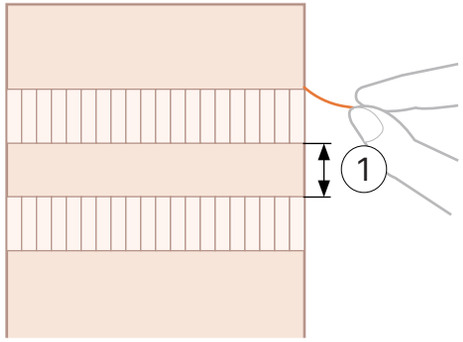

1. 4 mm / 0.15 in

B. Attach the monogramming foot “N”.

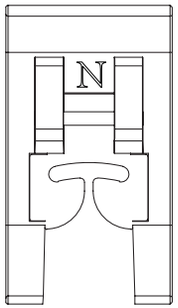

C. Select the stitch .

D. Sew along the center of the unworn section.

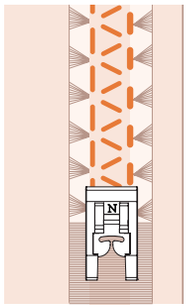

Embroidery

Chapter 1 Select Design

Select Design

Prepare the machine by following the steps in Basic Operations - Starting Embroidery. Turn on the machine and enter the embroidery home screen (the embroidery unit must be connected).

A. On the home screen, tap " Pattern Selection " or " Built-in Patterns ".

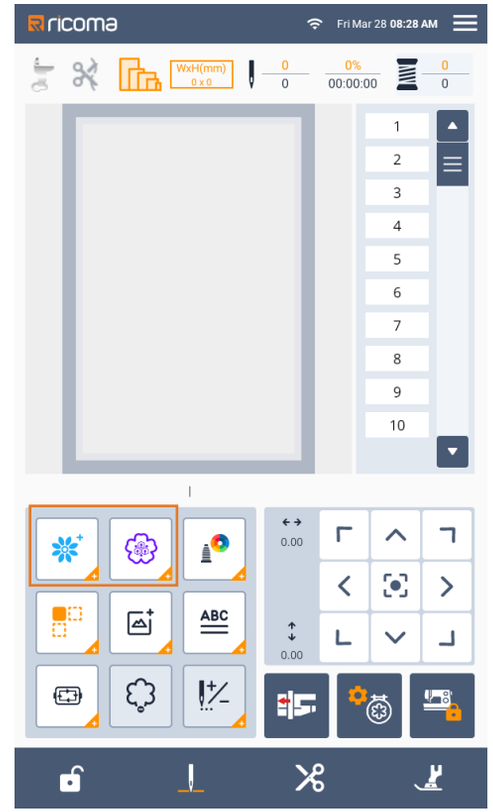

* Select the pattern category (the operation is the same for both Pattern Selection and Built-in Patterns).

B. Tap the pattern you wish to embroidery.

C. Press "OK" to finalize the pattern selection and return to the previous screen.

→ The selected pattern's outline is now highlighted in orange.

Selecting Letter Patterns

· Letter Embroidery: Text Editing

A. Tap " Text Editing" on the home screen.

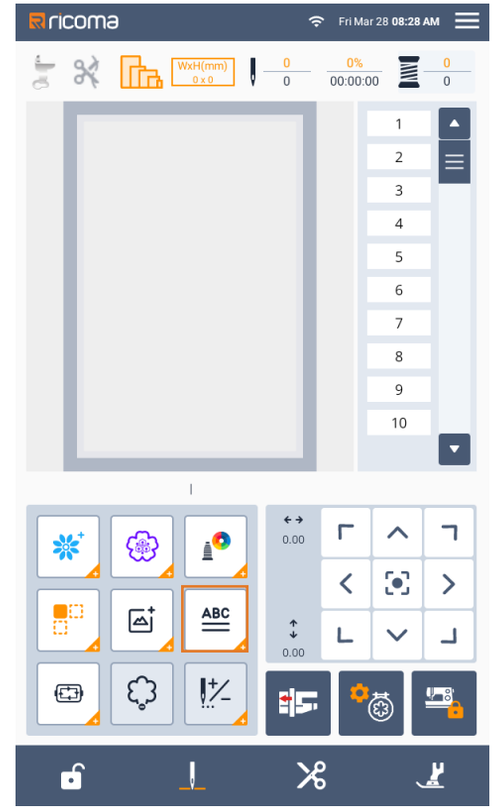

→ The setup process is the same for all letter embroidery options.

Letter embroidery settings include:

1. Text Editing
2. Font Selection
3. Stitch Fill Type
4. Layout Adjustment
5. Spacing Adjustment
6. Size Adjustment

B. Tap "Enter" to access the edit screen.

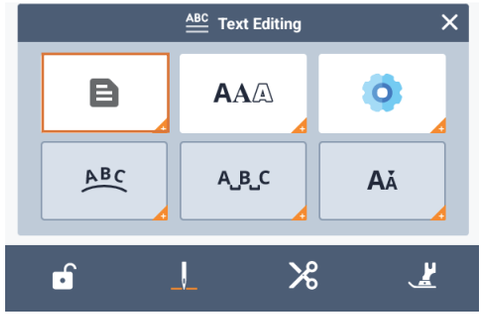

C. Tap the input field on the left to enter or modify text.

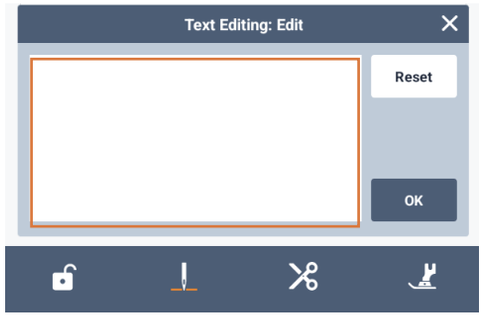

→ Tap "Reset" to clear the content, or tap "OK" to confirm.

D. Tap to return to the previous screen.

· Letter Embroidery: Font

On the home screen, tap " Text Editing ".

→ Refer to Step A in "Editing Letters".

B. Tap " Font " to enter the font settings screen and select the desired font.

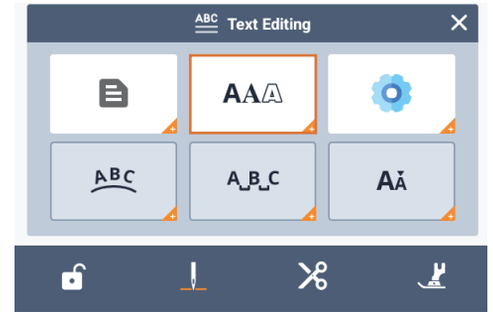

C. Tap the desired font on the left side to select it.

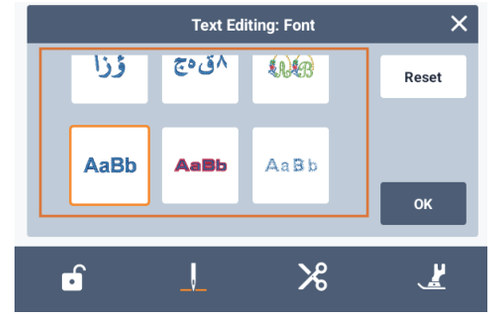

→ Tap " Reset " to revert the selection, or tap " OK " to confirm.

D. Tap to return to the previous screen.

· Letter Embroidery: Settings

A. On the home screen, tap "Text Editing".

→ Refer to Step A in "Editing Letters".

B. Tap "Stitch Fill" to enter the letter embroidery settings page and select the stitch fill type to adjust.

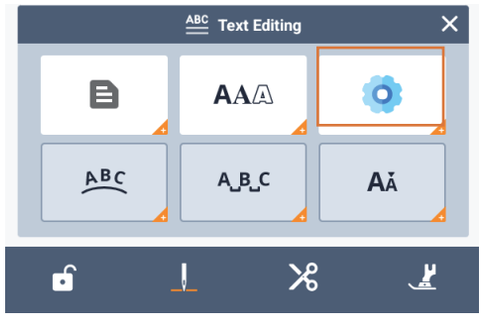

C. Tap to select the desired stitch fill type, underlay stitch style, and density.

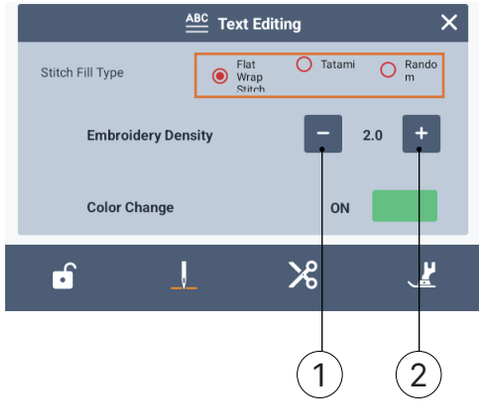

1. Tap to decrease embroidery density
2. Tap to increase embroidery density

→ Scroll down to also set the underlay stitch style and density.

D. Tap to return to the previous screen.

· Lettering Embroidery: Layout

A. On the home screen, tap "Text Editing".

→ Refer to Step A in "Editing Letters".

B. Tap "Layout" to enter the letter embroidery layout page.

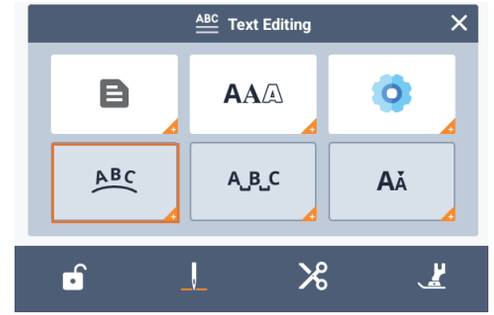

C. Tap on the left side to select the desired layout.

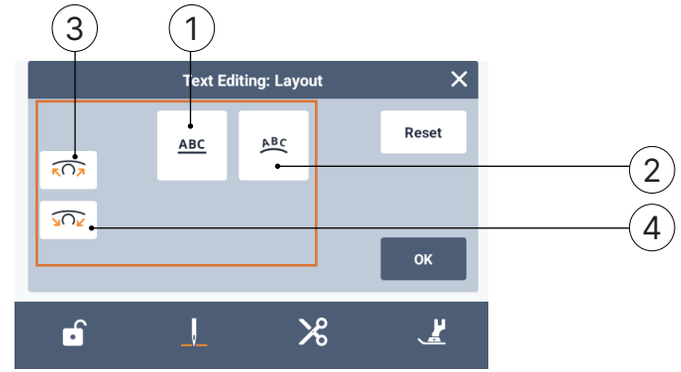

1. Linear Layout: Letters are arranged in a straight line.
2. Arc Layout: Letters are arranged in a straight line.
3. Increase the arc curvature.
4. Decrease the arc curvature.

→ Tap "Reset" to revert the settings, or tap "OK" to confirm.

D. Tap to return to the previous screen.

· Letter Embroidery: Spacing

A. On the home screen, tap "Text Editing".

→ Refer to Step A in "Editing Letters".

B. Tap "Character Spacing" to enter the letter embroidery spacing page.

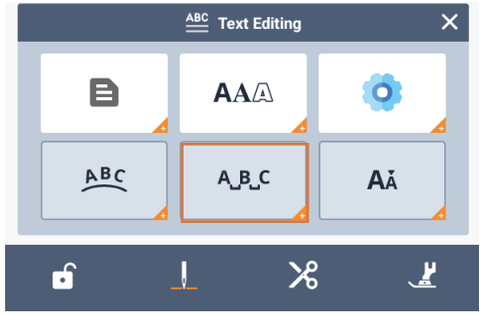

C. Tap on the left side to select the desired spacing.

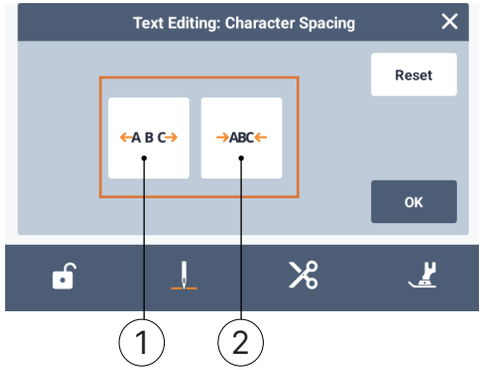

1. Tap once to increase letter spacing; tap continuously for further adjustment.
2. Tap once to decrease letter spacing; tap continuously for further adjustment.

→Tap "Reset" to revert the settings, or tap "OK" to confirm.

D. Tap to return to the previous screen.

· Lettering Embroidery: Resizing

A. On the home screen, tap "Text Editing".

→ Refer to Step A in "Editing Letters".

B. Tap "Resizing" to enter the letter embroidery size adjustment page.

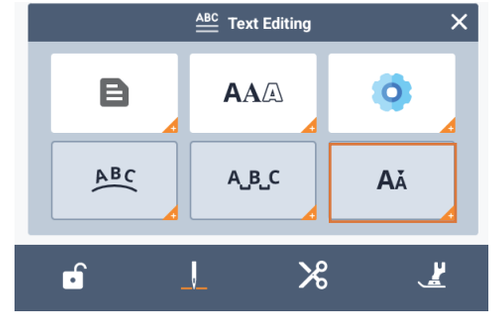

C. Tap on the left side to select the desired size.

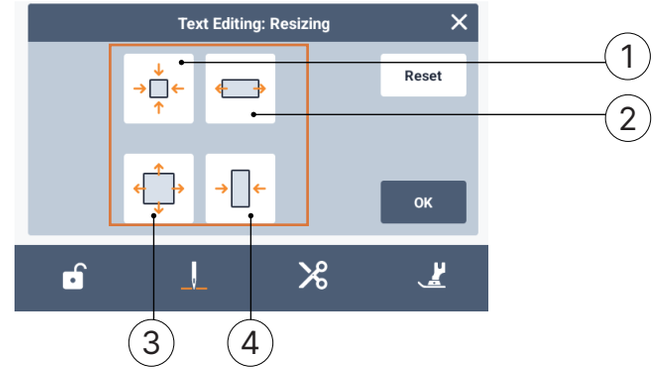

1. Tap once to proportionally decrease the letter size; tap continuously for further adjustment.
2. Tap once to horizontally enlarge the letter size; tap continuously for further adjustment.
3. Tap once to proportionally increase the letter size; tap continuously for further adjustment.
4. Tap once to horizontally reduce the letter size; tap continuously for further adjustment.

→ Tap "Reset" to revert the settings, or tap "OK" to confirm.

D. Tap to return to the previous screen.

Moving the Pattern

Use to move the pattern in the direction of the arrows.

· Tap to center the pattern.

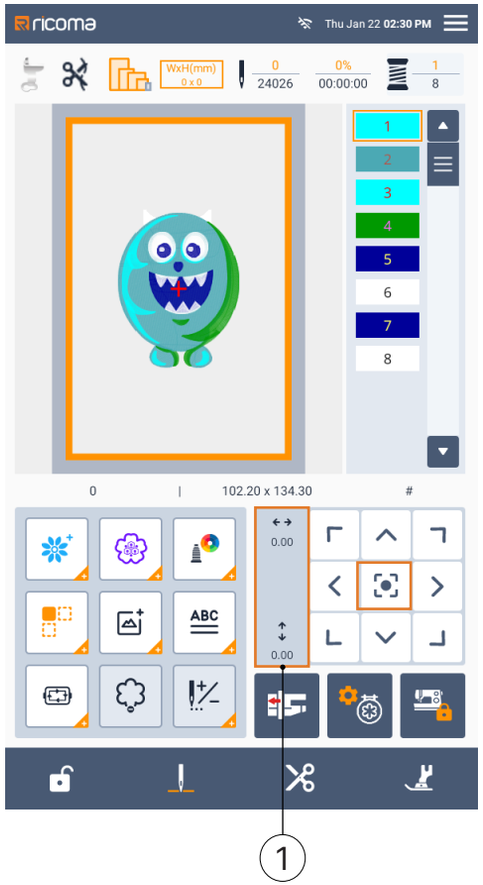

1. Offset from Center

Editing the Pattern

· Design Settings: Size

A. Tap to enter the pattern settings page.

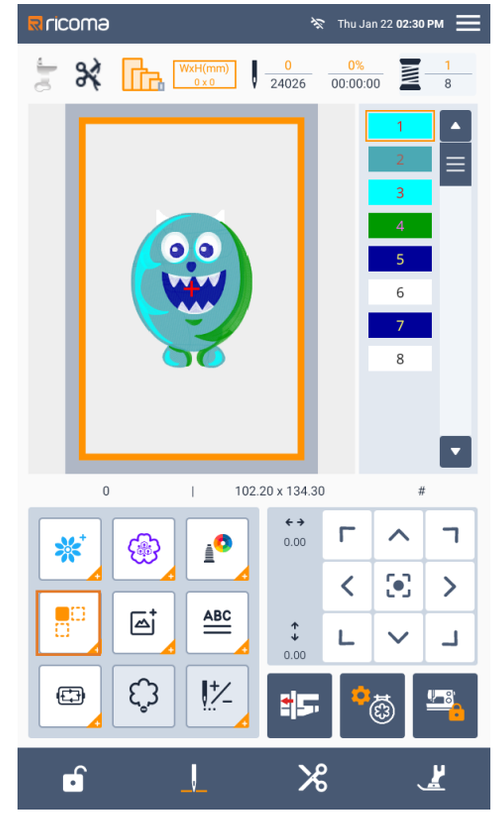

B. Tap to access Pattern Settings: Size.

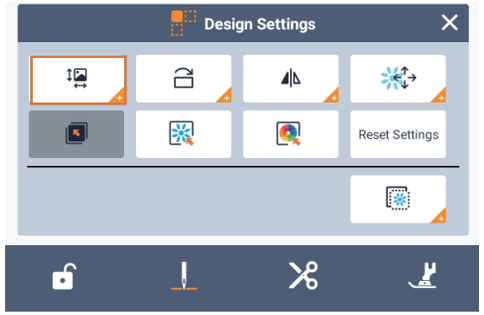

C. Tap on the left side to select the desired size adjustment type.

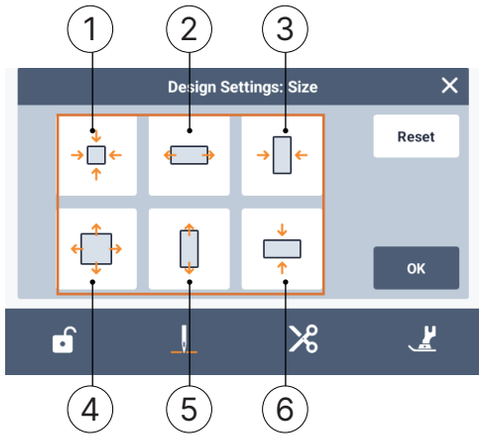

1. Tap once to proportionally decrease the pattern size; tap continuously for further adjustment.
2. Tap once to stretch the pattern horizontally; tap continuously for further adjustment.
3. Tap once to compress the pattern horizontally; tap continuously for further adjustment.
4. Tap once to proportionally increase the pattern size; tap continuously for further adjustment.
5. Tap once to stretch the pattern vertically; tap continuously for further adjustment.
6. Tap once to compress the pattern vertically; tap continuously for further adjustment.

→ Tap "Reset" to revert the settings, or tap "OK" to confirm.

D. Tap to return to the previous screen.

· Design Settings: Rotate

A. Tap to enter the pattern settings page.

→ Refer to Step A in "Design Settings: Size".

B. Tap to enter Design Settings: Rotate.

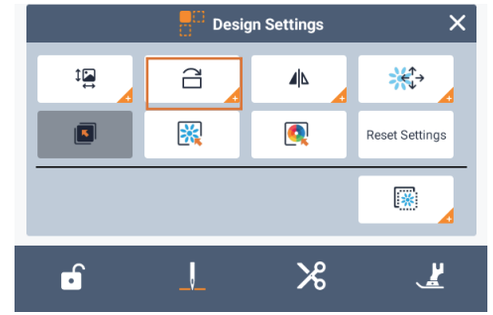

C. Tap on the left side to select the desired rotation type.

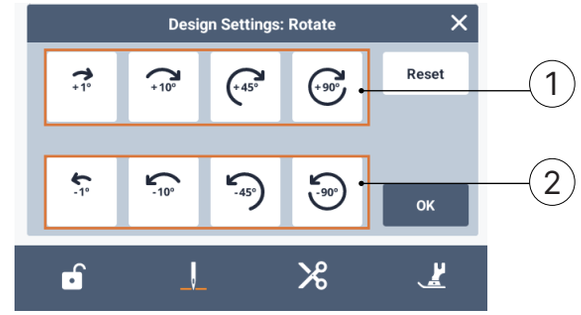

1. Tap to rotate clockwise; tap continuously for further rotation.
2. Tap to rotate counterclockwise; tap continuously for further rotation.

→ Tap "Reset" to revert the settings, or tap "OK" to confirm.

D. Tap to return to the previous screen.

· Design Settings: Mirror

A. Tap to enter the pattern settings page.

→ Refer to Step A in "Pattern Settings: Size".

B. Tap to enter Pattern Settings: Mirror.

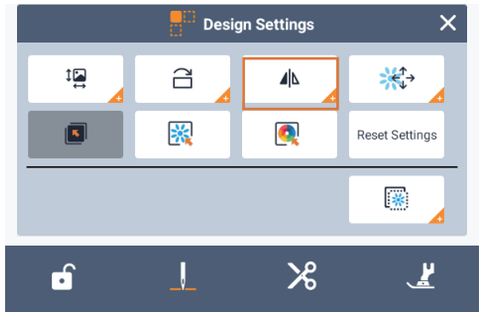

C. Tap on the left side to select the desired mirroring type.

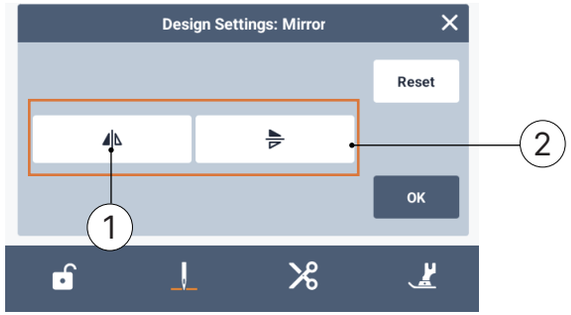

1. Horizontal Mirror
2. Vertical Mirror

→ Tap "Reset" to revert the settings, or tap "OK" to confirm.

D. Tap to return to the previous screen.

· Design Settings: Translation

A. Tap to enter the design settings page.

→ Refer to Step A in "Design Settings: Size".

B. Tap to enter Design Settings: Translation.

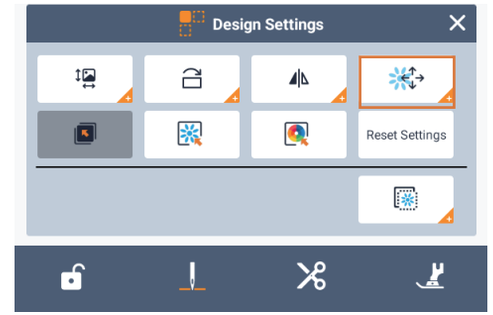

C. Tap on the left side to select the desired translation direction.

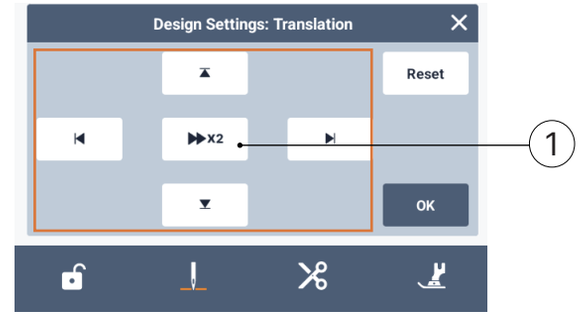

1. 2x Speed Movement
2. Drag directly on the screen to move the pattern freely

→ Tap "Reset" to revert the settings, or tap "OK" to confirm.

D. Tap to return to the previous screen.

· Design Settings: Design Layer Selection

A. Tap to enter the design settings page.

→ Refer to Step A in "Design Settings: Size".

B. When adjusting the four functions above (Size, Rotate, Mirror, Reposition), you can select specific pattern layers to operate on.

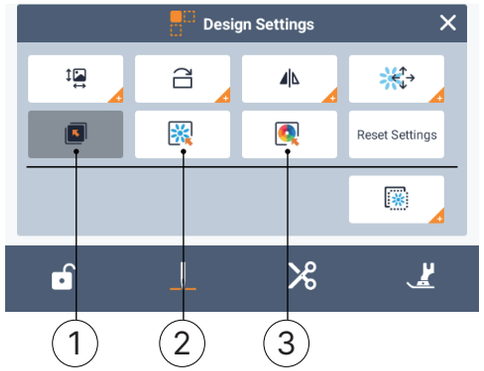

1. Select the entire combined pattern
2. Select a single pattern element
3. Select a single element's color sequence

Tips

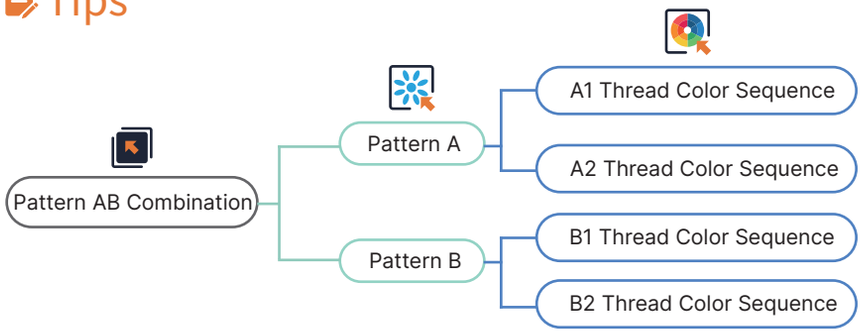

* Layer selection does not apply to the Copy function.

· Design Settings: Copy

A. Tap to enter the design settings page.

→ Refer to Step A in "Design Settings: Size".

B. Tap to enter Design Settings: Copy.

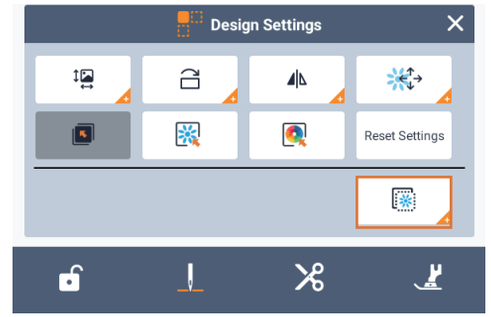

C. Tap on the left side to select the desired number of copies.

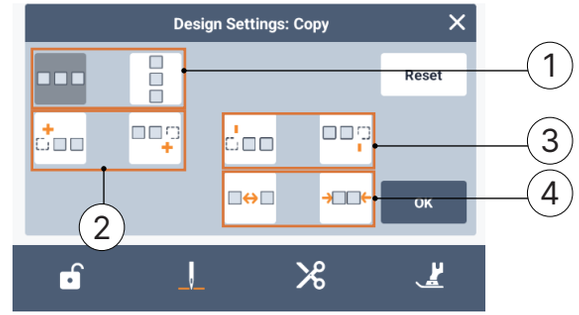

1. Horizontal / Vertical copy
2. Copy left / right; tap repeatedly to create multiple copies
3. Delete left / right; tap repeatedly to delete multiple copies
4. Increase / decrease spacing uniformly

· The same operation applies for vertical copying.

→ Tap "Reset" to revert the settings, or tap "OK" to confirm.

D. Tap to return to the previous screen.

Changing Thread Colors

Select a new color from the machine's thread colors to change the thread color.

A. On the home screen, tap to enter the thread color settings page.

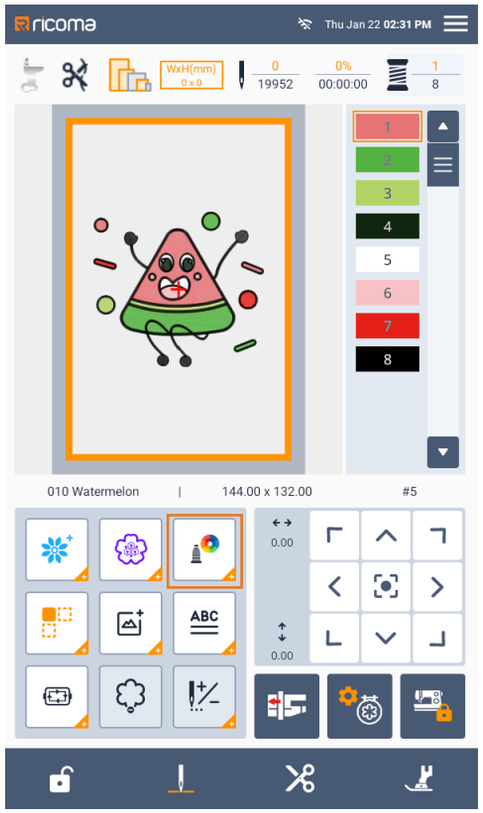

B. Tap "1" to select the color sequence number you wish to change. The corresponding color block in the pattern will flash.

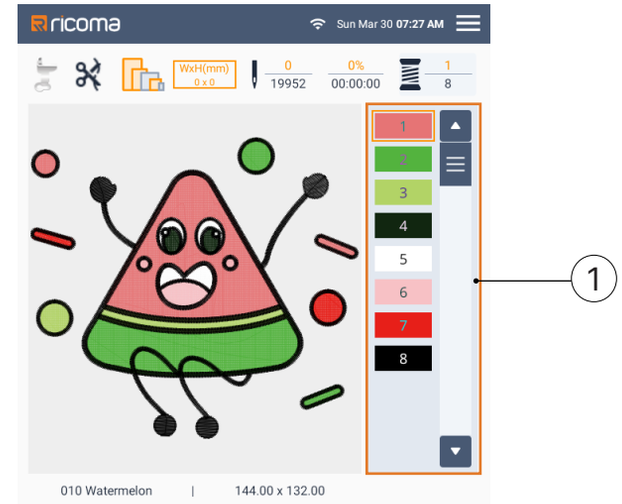

→ Tap to view more colors or drag the slider.

C. Tap the desired color square to change the color.

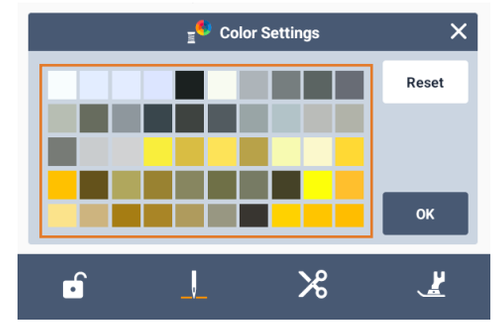

→ Tap "Reset" to revert the settings, or tap "OK" to confirm.

· Scroll down to select more colors.

D. Tap to return to the previous screen.

Chapter 3 Combining Patterns

Editing a Combined Pattern

Example: Combining letter characters with an embroidery pattern and editing them together.

A. On the home screen, tap to enter Letter embroidery.

B. Enter text: ABCD

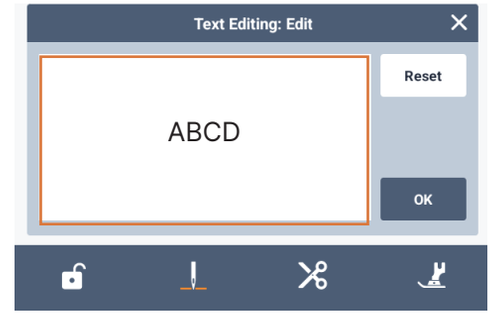

→ Tap "Reset" to clear the content, or tap "OK" to confirm.

· For detailed instructions, refer to the "Selecting Letter Patterns" section.

C. Tap to return to the home screen.

D. On the home screen, tap to select an embroidery pattern.

E. Tap on the left side to select an embroidery pattern.

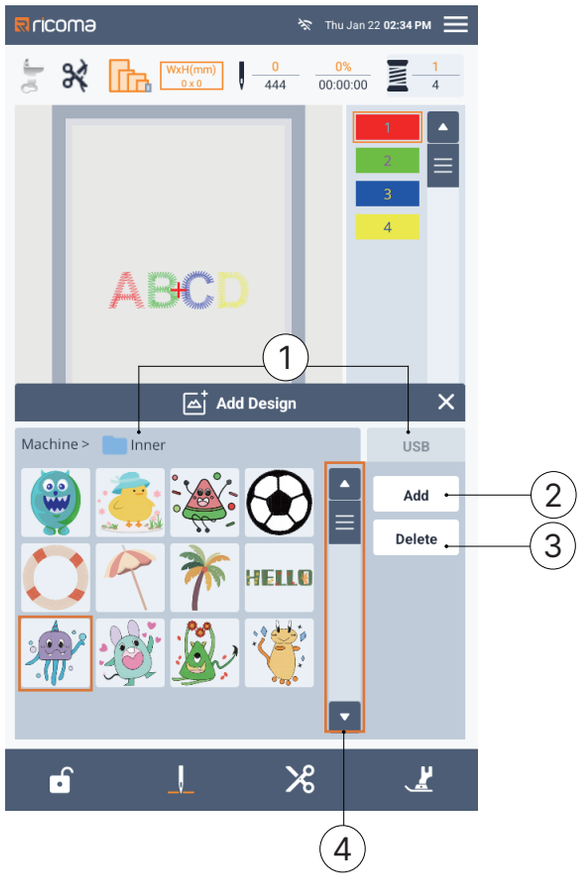

1. Tap to switch between "Internal Memory" and "USB"
2. After selecting a pattern, tap to add the pattern
3. After selecting a pattern, tap to delete the pattern
4. Tap to select more patterns

F. Tap to return to the home screen.

G. Tap to enter the pattern settings page.

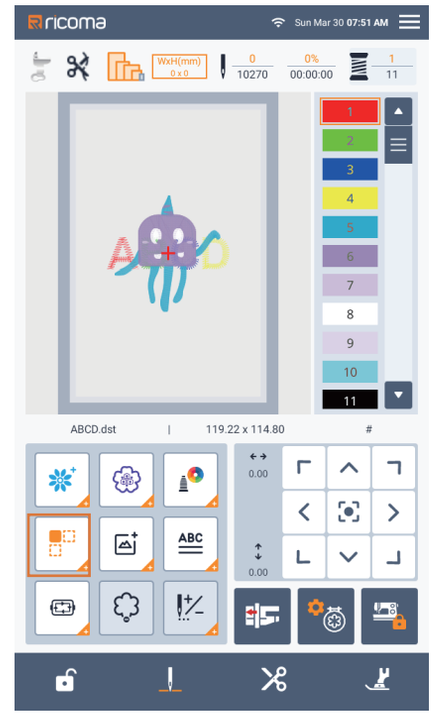

H. Tap to choose a single pattern element.

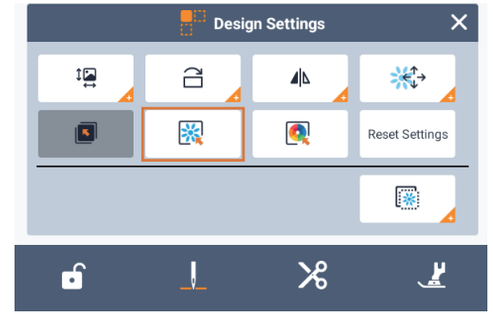

I. Tap to adjust the pattern position.

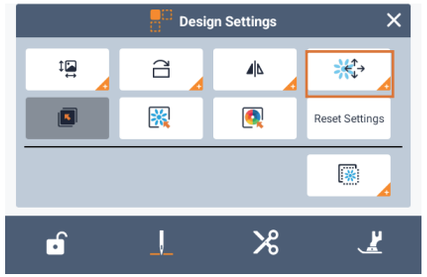

→ You can also drag the pattern directly on the screen to adjust its position.

· For detailed instructions, refer to the "Editing the Pattern" section.

J. Tap to return to the home screen.

K. Tap to change the pattern colors.

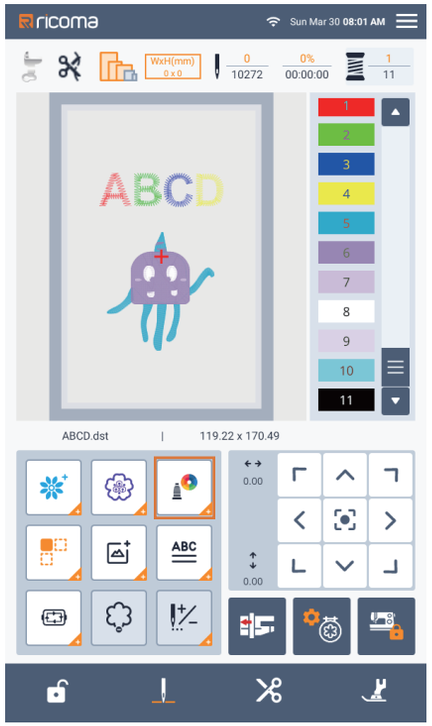

· For detailed instructions, refer to the "Changing Thread Colors" section.

L. Pattern combination is complete. Start embroidering.

Chapter 4 Editing All Patterns

Embroidery Settings Screen

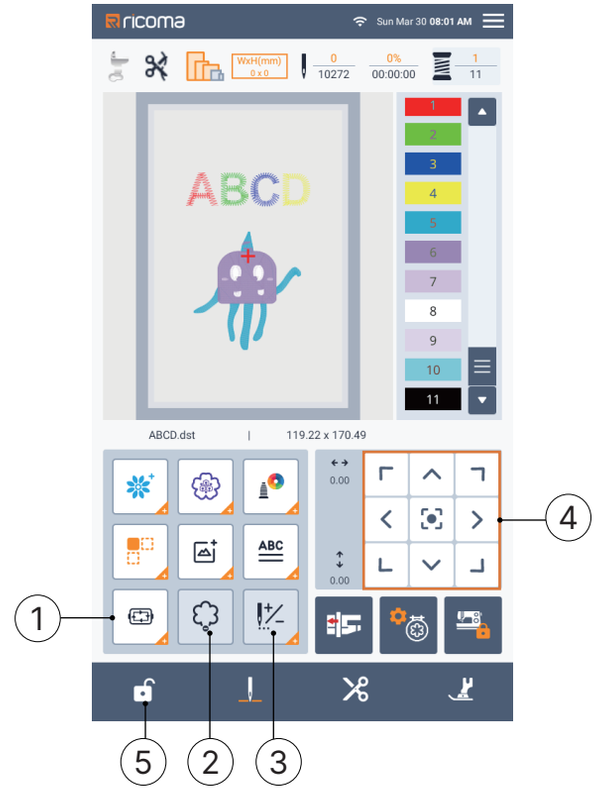

1. Needle drop point selection and pattern path preview
2. Return to embroidery stop position
3. Set stitch count start position
4. Move embroidery frame
5. Functions 2 and 3 are only activated when the machine enters embroidery mode, i.e., when the icon in the bottom left corner changes from to .

Moving the Pattern

Tap to move the pattern.

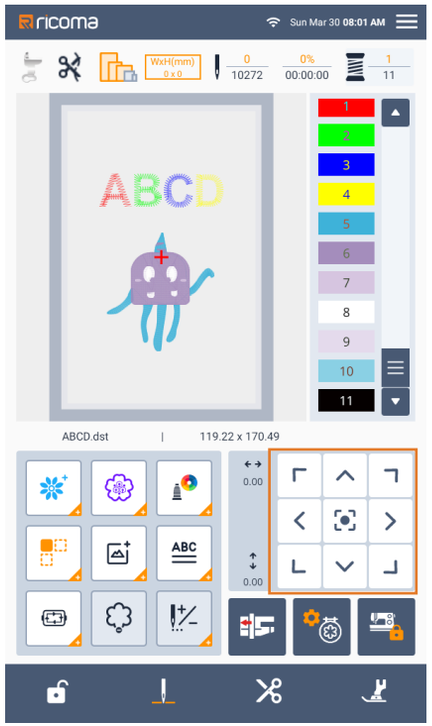

Precise Pattern Positioning

Example: Aligning the bottom left corner of the pattern with the needle.

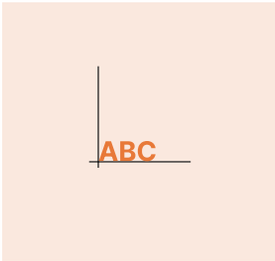

A. Mark the starting position for embroidery on the fabric as shown below.

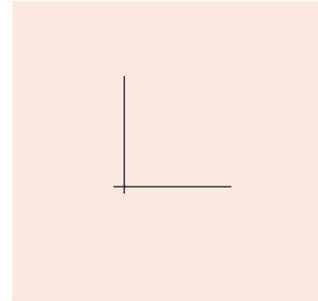

B. On the home screen, tap to enter the pattern start point setting.

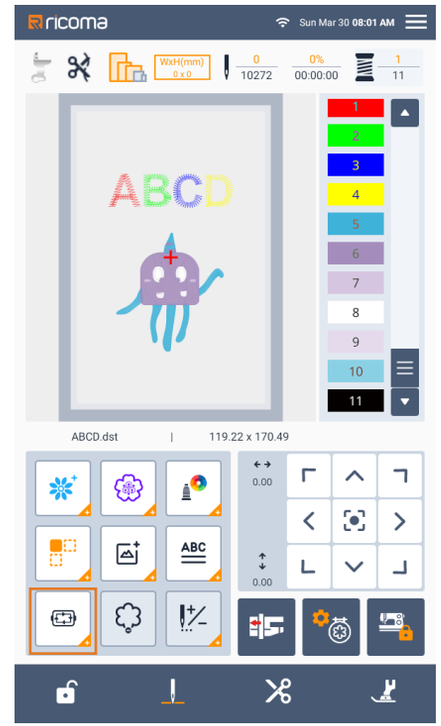

C. Tap .

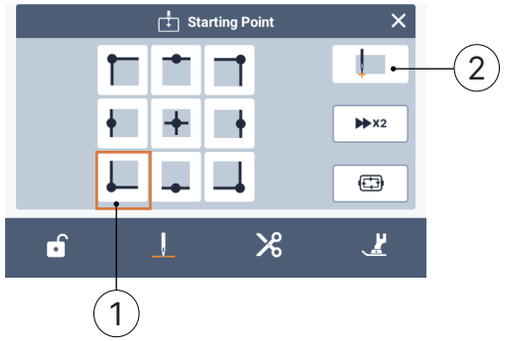

1. Start position

2. Use this key to align connected characters

→ The needle position moves to the bottom left corner of the pattern (the embroidery frame moves to position the needle correctly).

D. Tap to return to the home screen.

E. Tap to align the needle with the mark on the fabric, then start embroidering the pattern.

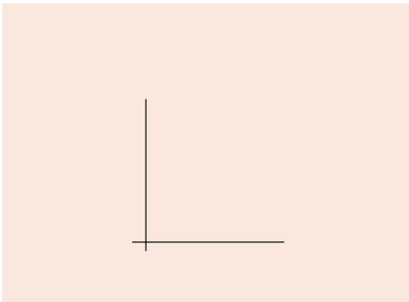

Embroidering Connected Characters

When the entire pattern exceeds the embroidery frame area, follow these steps to embroider connected characters in separate lines:

Example: Connecting "DEF" to "ABC" using a 10 cm × 10 cm / 3.9 × 3.9 in embroidery frame (optional for some models)

ABCDEF

A. On the home screen, tap to enter Letter embroidery and enter "ABC".

·For detailed instructions, refer to the "Selecting Letter Patterns" section.

B. On the home screen, tap to enter the pattern start point setting.

· For detailed instructions, refer to the "Precise Pattern Positioning" section.

C. Tap

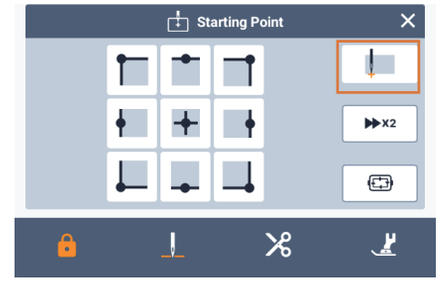

D. Tap to enter embroidery mode.

E. Lower the presser foot, then press the "Start / Stop" button to begin embroidering.

F. After the characters are embroidered, cut the threads, remove the embroidery frame, and tap "OK" "Embroidery Complete".

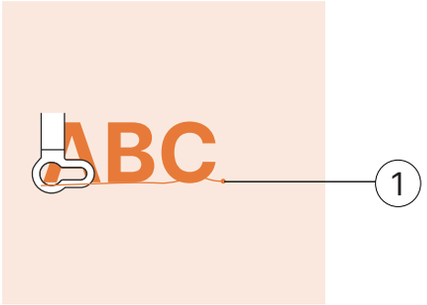

1. Embroidery end position

G. Reposition the fabric in the embroidery frame so that part of the right side of the letter "C" is inside the frame, ensuring the letters remain vertical and horizontal. Then, reattach the embroidery frame to embroider the remaining characters ("DEF").

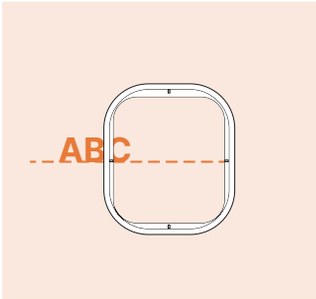

H. As in Step A, select the character pattern for "DEF".

I. On the home screen, tap to enter the pattern start point setting.

J. Tap , then tap

→ The needle is now positioned at the bottom left corner of the pattern. The embroidery frame moves to position the needle correctly.

K. Use to align the needle with the embroidery end position of the previous pattern.

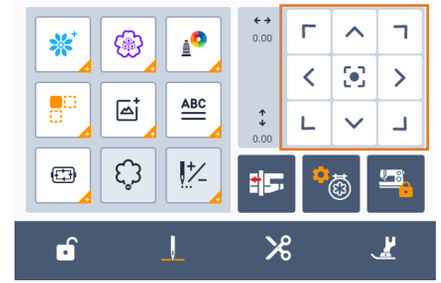

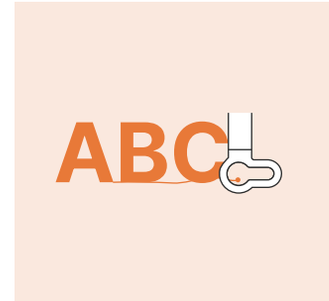

L. Tap to enter embroidery mode.

M. Lower the presser foot, then press the "Start / Stop" button to begin embroidering the remaining character pattern.

Chapter 5 Adjustments During the Embroidery Process.

Tips

· Do not bump the embroidery unit guide rail or presser foot when removing or installing the embroidery frame. Otherwise, the embroidered pattern may be distorted.

If the Bobbin Thread Runs Out

If the bobbin thread is about to run out during embroidery, the machine will stop and display the following message. Press OK and follow the instructions below to re-thread the bobbin.

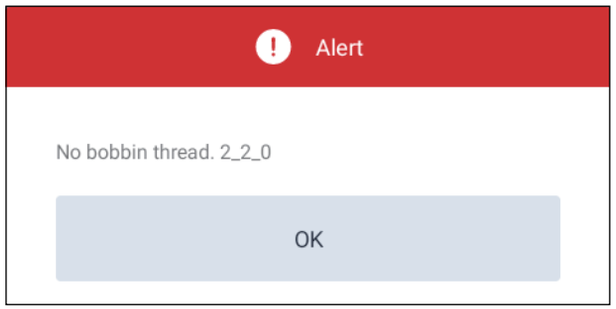

A. Unlock the frame fixing rods and remove the embroidery frame.

· Do not apply excessive force to the fabric at this time. Otherwise, the fabric will loosen in the embroidery frame.

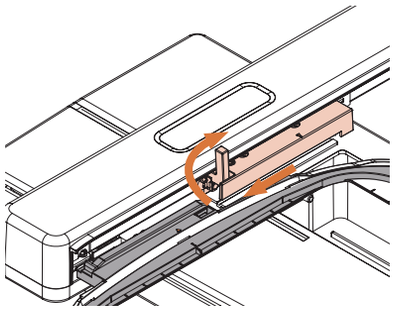

B. Insert the wound bobbin into the machine. (See "Installing the Bobbin" in "Basic Operation".)

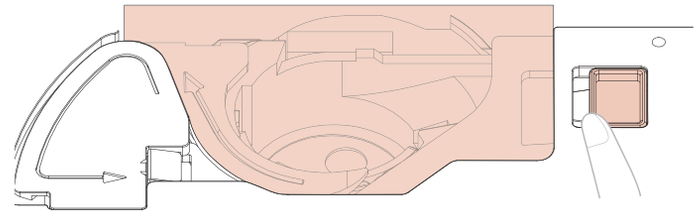

C. Install the embroidery frame.

D. To return to the area where you stopped embroidering in the pattern, follow steps B through E in the next section.

If the Thread Breaks During Embroidery

A. Press the "Start / Stop" button to stop the machine.

B. If the top thread is broken, re-thread the top thread. If the bobbin thread is broken, click "OK" and reset the bobbin according to steps A to D in the previous section.

C. Click on the home page.

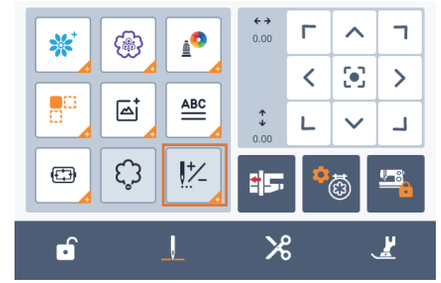

C. Click -1 -10 , or -100 move the needle back to the correct number of stitches before the break point.

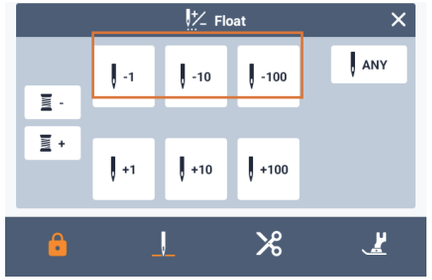

Tips

· If you cannot move back to the broken line area, click Select color and move to the beginning of that color, then use +1 +10 or +100 to move forward so that it is slightly before the broken line.

D. Click to return to the original screen.

E. Click the "Presser Foot Lift Button" to lower the presser foot, then press the "Start / Stop" button to continue embroidering.

Starting Again from the Starting Point

A. Click on the homepage.

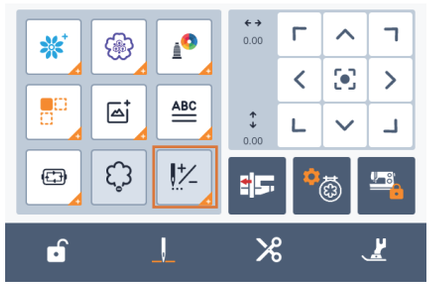

B. Click ANY to enter the pop-up window.

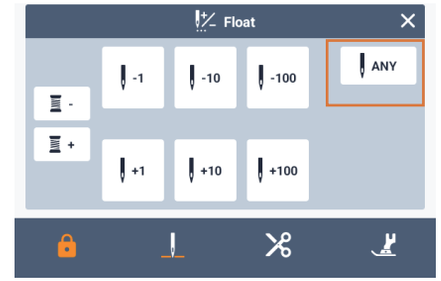

C. Enter 0 stitches.

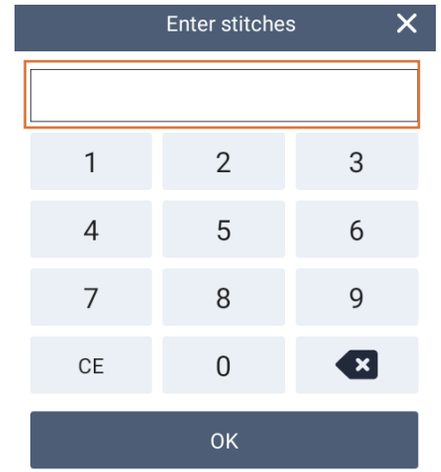

D. Click "Confirm".

The embroidery frame moves, returning the needle to the starting position of the pattern.

E. Click the "Presser Foot Lift Button" to lower the presser foot and begin embroidering.

Continue Embroidery After Power Off

The current color and stitch count will be saved when embroidery stops. The next time the machine is turned on, you can choose to continue or delete the pattern.

Tips

· Even if power is off during embroidery, the machine will resume at the point where embroidery stopped when it is turned on again.

1. Number of Stitches When Embroidery Stops / Number of Stitches When Embroidery Resumes

Tips

· Do not remove the embroidery unit, otherwise the memory will not remember your design.

A. Turn on the main power.

B. Please follow the on-screen instructions to remove the embroidery frame.

→ The following information will appear.

C. Install the embroidery frame and click "OK".

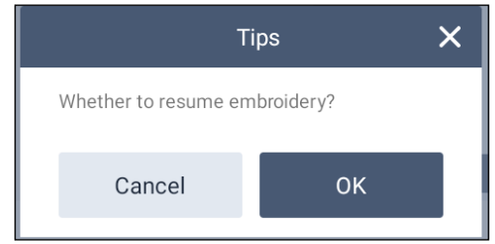

→ The previous embroidery screen displayed before shutting down the machine will appear.

Tips

· To start embroidering a new pattern, click "Cancel" to display the pattern selection screen.

D. Continue embroidering.

Chapter 6 Adjusting the Embroidery Pattern

Adjusting Thread Tension

When embroidering, the thread tension should be set so that the top thread is slightly visible from the reverse side of the fabric.

· Correct Thread Tension

The pattern should be visible from the reverse side of the fabric. If the thread tension is incorrect, the pattern will not look good. The fabric may wrinkle or the thread may break.

Front Back

Adjust the thread tension as follows, depending on the situation.

Tips

· If the thread tension is set too low, the machine may stop during embroidery. This does not indicate a malfunction. Slightly increase the thread tension and then restart the embroidery.

· If you turn off the main power or select a different pattern, the thread tension will reset to the automatic setting.

· Top Thread too Tight

Due to excessive top thread tension, the bobbin thread may be visible from the right side of the fabric.

Tips

· If the bobbin thread is not threaded correctly, the top thread tension may become too tight. In this case, please refer to 'Installing the Bobbin' under 'Basic Operations' and rethread the bobbin thread.

Front Back

A. During machine embroidery, a real-time adjustment page will pop up on the main screen.

B. Click "Relax Top Thread Tension" (the tension value will decrease).

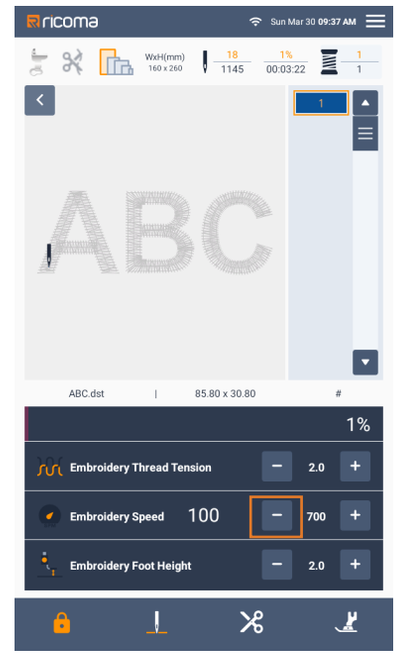

C. Click to restore the original page.

· Top Thread too Loose

Due to insufficient top thread tension, loose top thread, loose stitches, or loops appear on the right side of the fabric.

Tips

· If the top thread is not threaded correctly, it may be too loose. In this case, please refer to "Top Thread Threading" under "Basic Operations" and re-thread the top thread.

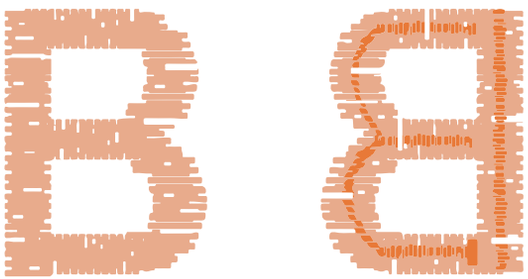

Front Back

A. During machine embroidery, a real-time adjustment page will pop up on the main page.

B. Click "Tighten Top Thread Tension" (the tension value will increase).

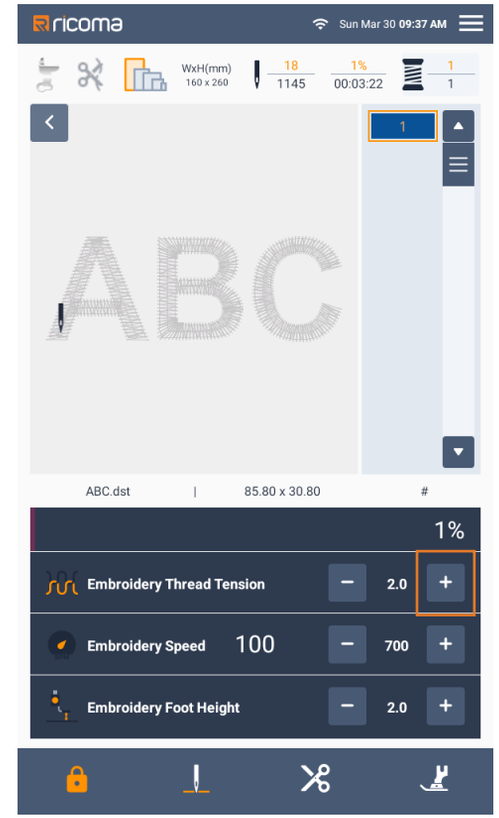

C. Click "Restore Original Page".

Tips

· The above tension adjustment function will be synchronized with the "Tension Adjustment" function, and the tension value will be synchronized across all patterns.

Adjusting Embroidery Speed

Method 1

· When machine embroidering, a real-time adjustment page will pop up on the homepage.

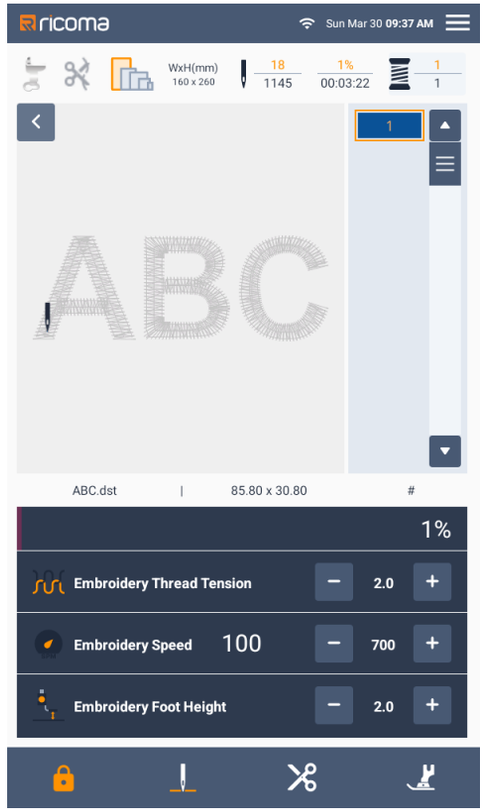

A. Find "Embroidery Speed"

B. Click to change the "Maximum Embroidery Speed"

Tips

· The speed adjustment function mentioned above will be synchronized with the "Maximum Embroidery Speed" function in the settings, and the adjustment value will be synchronized to all patterns. The default value will be restored after the machine restarts.

Method 2

A. Click on the homepage to enter the embroidery settings page.

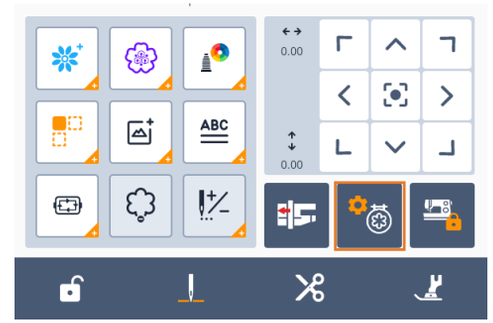

B. Find the maximum embroidery speed and adjust the value.

This adjustment will apply to all patterns.

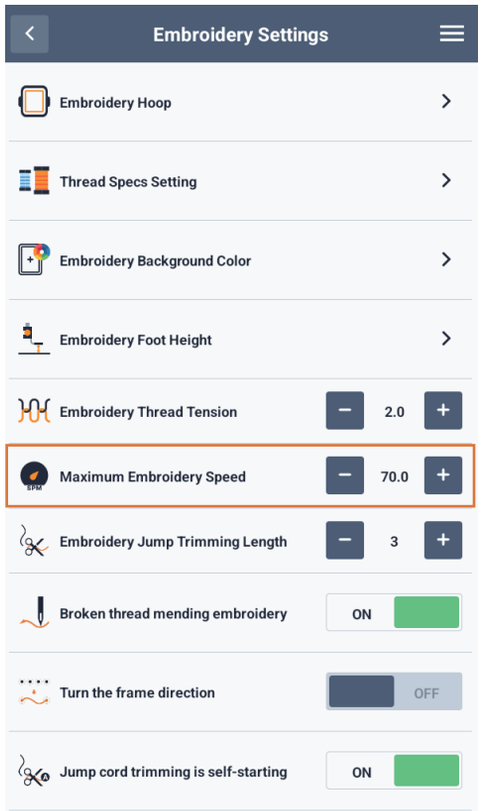

C. Click − + Change "Maximum Embroidery Speed".

D. Click < Restore Original Page.

Presser Foot Height Adjustment

· During machine embroidery, a real-time adjustment page will pop up on the main screen.

A. Locate "Presser Foot Height"

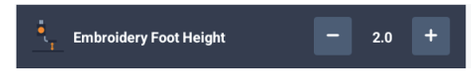

B. Click − + "Change Presser Foot Height".

Tips

·The speed adjustment function mentioned above will be synchronized with the "Presser Foot Height" function, and the adjusted value will be applied to all patterns. The machine will revert to the default value after a restart.

Change the Background Color of the Embroidery Pattern

A. Go to the homepage and click to enter the embroidery settings page.

B. Find the embroidery frame background and click to enter.

This function adjustment will apply to all patterns.

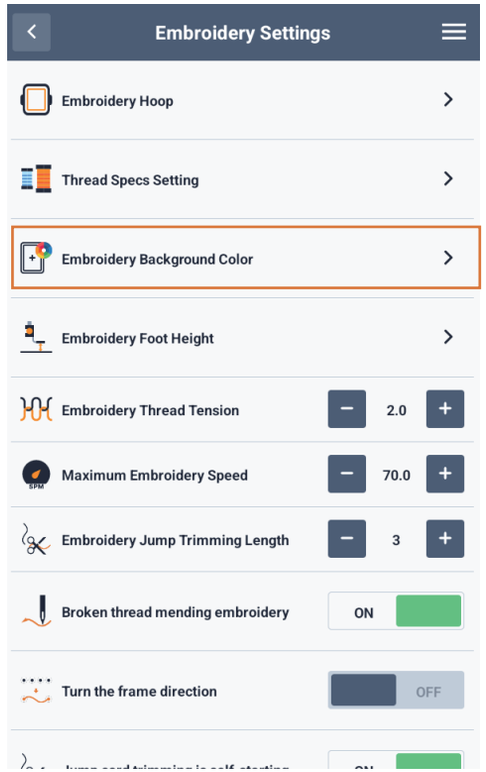

C. Click the color swatch below and select your preferred color.

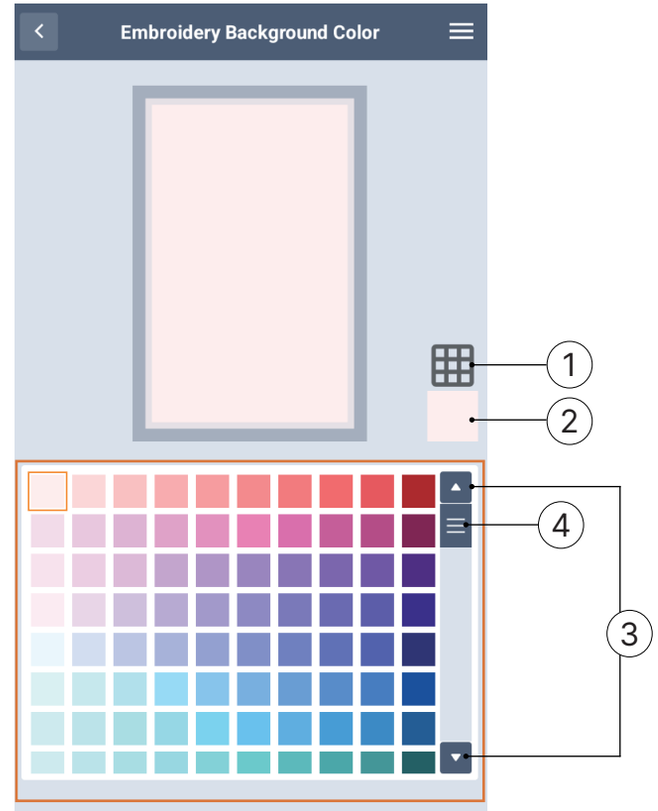

1. Click Add Grid
2. Preview the current background color; clicking will return to the machine's default background.
3. Click Previous Page / Next Page
4. Slide to show more

D. Click Restore Original Page.

Chapter 7 Use the Storage Function

Saving / Moving a Pattern to a USB Flash Drive

To transfer an embroidery pattern from the machine to a USB flash drive, plug the USB flash drive into the machine's USB port.

Tips

· While USB flash drives are available for purchase, some may not be compatible with this machine.

· You can plug or unplug the USB flash drive at any time unless you are saving or deleting a pattern.

A. Insert the USB flash drive into the USB port on your device.

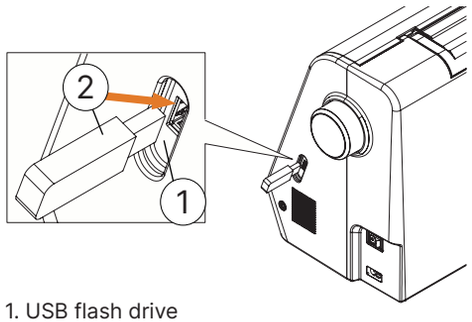

1. USB flash drive
2. USB Port

Tips

· Processing speed varies depending on the amount of data.

· Do not insert anything other than the USB flash drive into the USB port. Otherwise, the USB flash drive may be damaged.

B. On the home page, click to enter the pattern selection.

C. Click to select a pattern in the lower left corner.

D. Click Copy "Copy" or Move "Move" to enter the pop-up window.

E. Click to select "USB Path".

F. After selecting the save path, click "Save" to save.

Save / Move Patterns from USB Flash Drive to Machine Memory

A. Insert the USB flash drive into the USB port on your machine.

See the previous chapter for detailed instructions.

B. On the home page, click to enter the pattern selection.

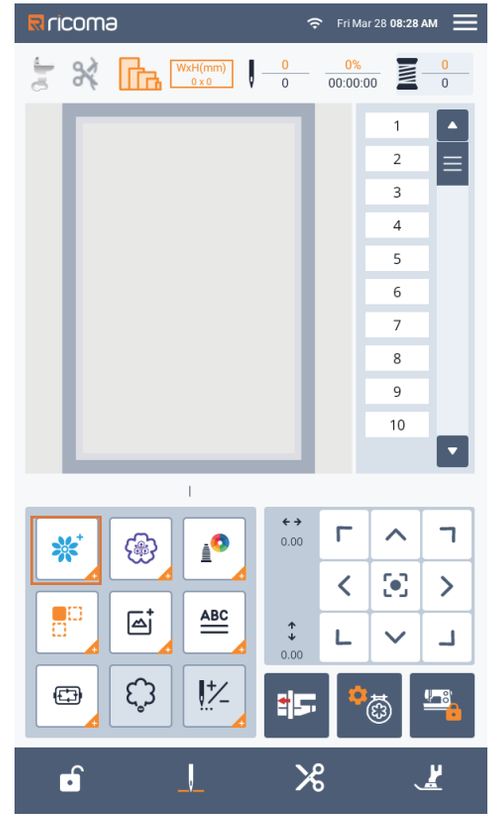

C. Click to switch to"USB".

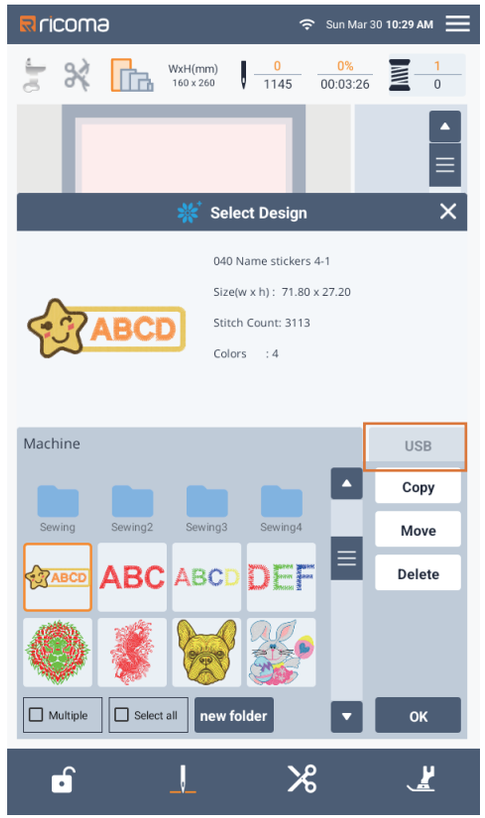

D. Click to select a pattern in the lower left corner.

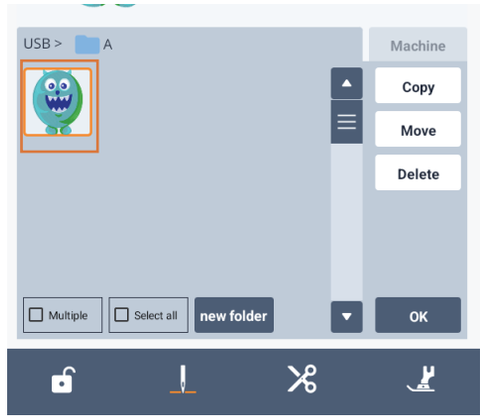

E. Click Copy "Copy" or Move "Move" to enter a pop-up window.

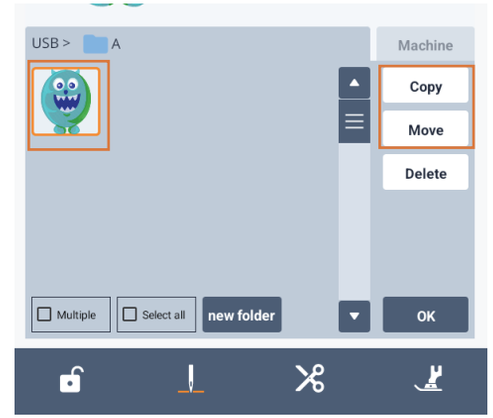

F. Click to select the "Memory Path".

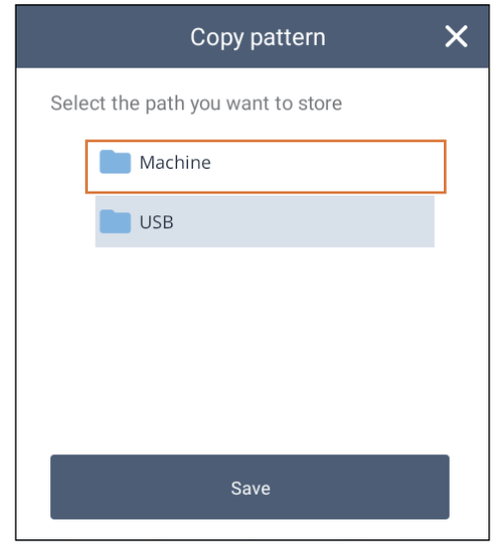

G. After selecting the path to save, click "Save" to save.

To Delete Patterns from the Machine's Memory

A. Go to the homepage and click to enter the pattern selection.

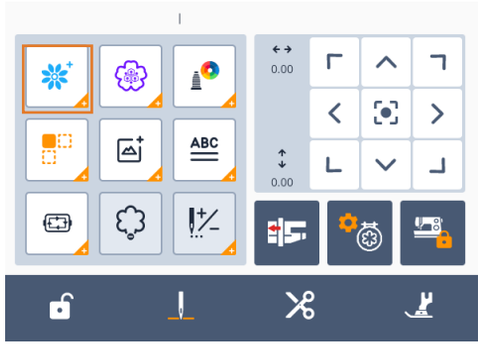

B. Click the bottom left corner to select a pattern.

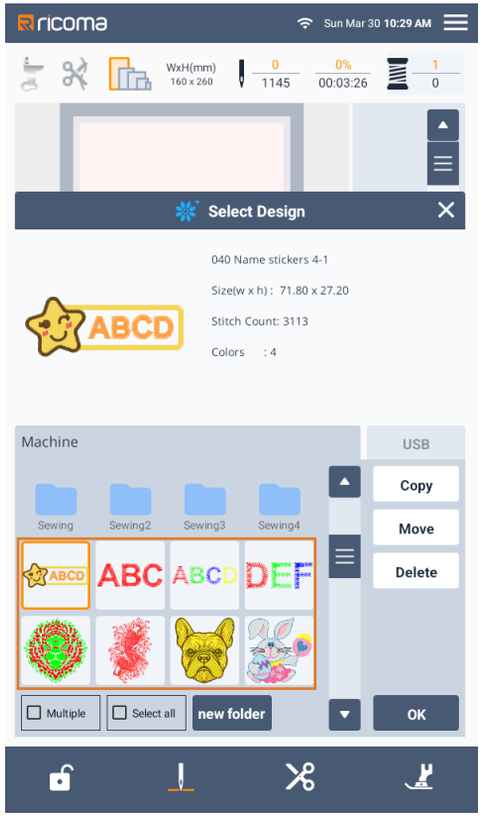

C. Click "Delete".

Caution

· The machine's built-in free patterns have an accidental deletion protection program; built-in patterns cannot be deleted from the machine.

D. Click "Restore to Homepage".

· Selecting a Pattern from a USB Flash Drive

A. Insert the USB flash drive into the USB port on the machine.

For detailed instructions, see "Saving / Moving a Pattern to a USB Flash Drive".

B. On the main page, click to enter the pattern selection.

For detailed instructions, see the previous section.

C. Click to select a pattern in the lower left corner, then click "OK".

D. Click to enter embroidery mode and begin embroidery.

Wireless Pattern Transfer

This machine supports pattern transfer using WiFi. Please refer to the video tutorial for specific instructions.

A. On the main page, click in the upper right corner to enter the control center.

B. Click to view the video tutorial.

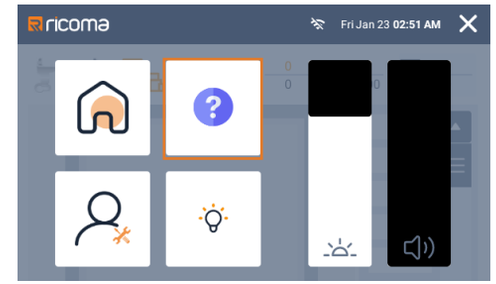

Appendix

Chapter 1 Maintenance and Servicing

Lubrication Restrictions

· To prevent damage to the machine, users must not apply lubrication oil by themselves.

· The machine is pre-lubricated at the factory to ensure proper operation, so periodic lubrication is not required.

· If problems occur (such as difficulty turning the handwheel or abnormal noise), stop using the machine immediately and contact Ricoma or your distributor.

Machine Storage PreCautions

Do not store the machine in any of the following locations, otherwise damage such as condensation-related rust may occur.

· Locations with extremely high temperature
· Locations with extremely low temperature
· Locations with rapid temperature changes
· Locations with high humidity or steam
· Locations near flames, heaters, or air conditioners
· Outdoor locations or places exposed to direct sunlight
· Environments with dust or oil contamination

Tips

· To extend the service life of the machine, operate it periodically. Long-term storage without use may reduce performance.

Cleaning the LCD Screen

If the screen becomes dirty, gently wipe it with a soft dry cloth. Do not use organic solvents or detergents.

Tips

· Do not wipe the LCD screen with a wet cloth.

· Water droplets or fog may occasionally form on the LCD screen; this does not indicate a malfunction. These will disappear shortly.

Cleaning the Machine Surface

If the machine surface becomes dirty, lightly moisten a cloth with neutral detergent, wring it well, and wipe the surface. After wiping with a damp cloth, wipe again with a dry cloth.

Caution

· Always unplug the power cord before cleaning the machine, otherwise injury or electric shock may occur.

Cleaning the Rotary Hook

If lint and dust accumulate in the rotary hook, sewing performance will decrease, so clean it regularly.

A. Press the "Needle Position" button to raise the needle.

B. Turn off the machine.

C. Unplug the power cord from the power socket on the right side of the embroidery machine.

Caution

· Always unplug the power cord before cleaning the machine, otherwise injury or electric shock may occur.

D. Raise the presser foot lever and remove the needle, presser foot, and presser foot holder.

For details, refer to “Basic Operation” → “Replacing the needle” and “Replacing the presser foot.”

E. Remove the extension table; if the embroidery unit is installed, remove it as well.

F. Remove the needle plate cover.

If the needle plate cover has screws:

A) Use a coin-type screwdriver to remove the screws on the needle plate cover.

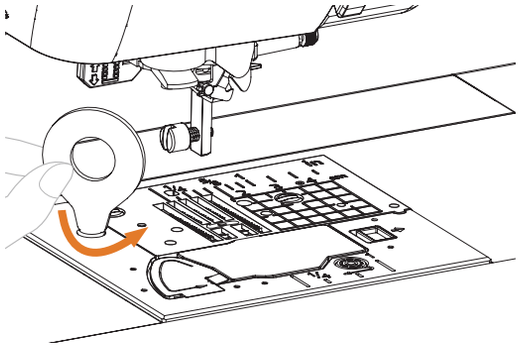

B) Hold both sides of the needle plate cover and slide it toward you.

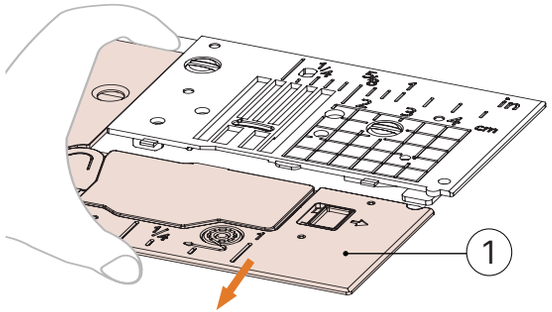

1. Needle plate cover

· If the needle plate cover has no screws:

Hold both sides of the needle plate cover and slide it toward you.

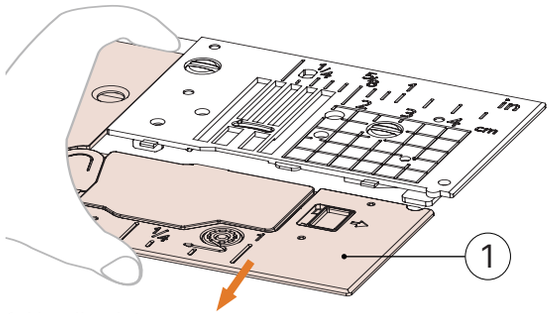

1. Needle plate cover

G. Remove the rotary hook.

Hold the rotary hook and pull it out.

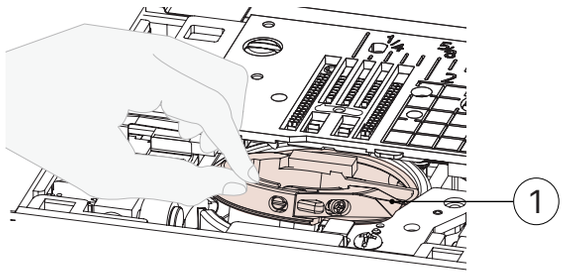

1. Rotary hook

H. Use a cleaning brush or vacuum cleaner to remove any lint and dust from the rotary hook, bobbin thread sensor, and surrounding area.

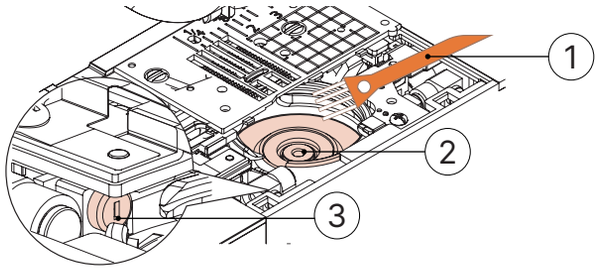

1. Cleaning brush
2. Rotary hook
3. Bobbin thread sensor

· Do not apply oil to the rotary hook.

I. Insert the rotary hook so that the ▲ mark on the hook aligns with the ● mark on the machine.

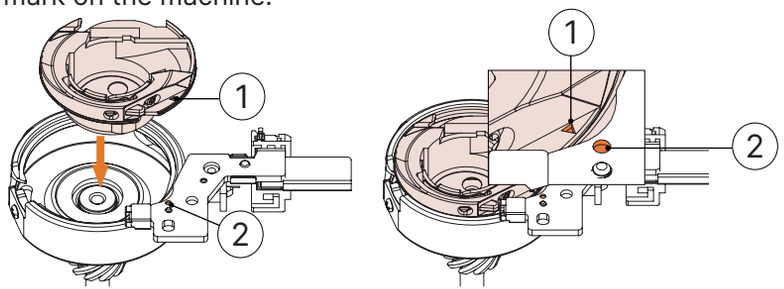

· Align the ▲ and ● marks.

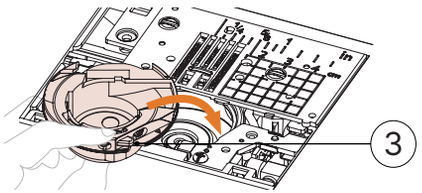

1. ▲ Mark
2. ● Mark
3. Rotary hook

· Be sure to align the indicated marks before installing the rotary hook.

J. Insert the tab on the needle plate cover into the needle plate, then slide the cover back into place.

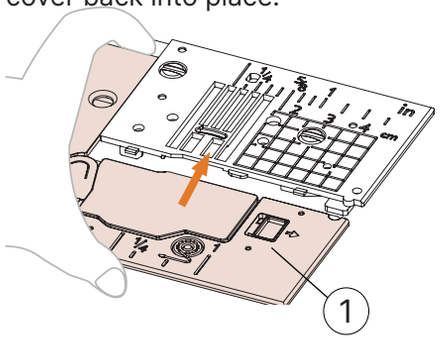

1. Needle plate cover

⚠ Caution

· Do not use a scratched rotary hook; otherwise it may cause upper thread tangling, needle breakage, and affect sewing performance. If you need a new rotary hook, contact Ricoma or your distributor.

· Ensure the rotary hook is installed correctly, otherwise needle breakage may occur.

Chapter 2 Troubleshooting

If the machine does not operate correctly, check the following possible issues before requesting service.

Most problems can be resolved by yourself.

If the problem persists, contact Ricoma or your distributor.

Common Troubleshooting

The following describes the detailed causes and solutions for common troubleshooting topics. Please be sure to read this before contacting us.

Upper Thread Too Tight	Page 173
Bobbin Thread Visible On Underside Of Fabric	Page 174
Incorrect Thread Tension	Page 176
Fabric Caught In Machine And Cannot Be Removed	Page 177
Thread Tangled Under Bobbin Winder Base	Page 181

Upper Thread too Tight

· Symptoms

A. The upper thread appears as one continuous line.

B. The bobbin thread can be seen from the underside of the fabric.

(See figure below)

C. The upper thread is too tight and becomes visible when pulled.

D. The upper thread is too tight, causing puckering on the fabric surface.

E. The upper thread tension is excessively tight and does not improve even after adjustment.

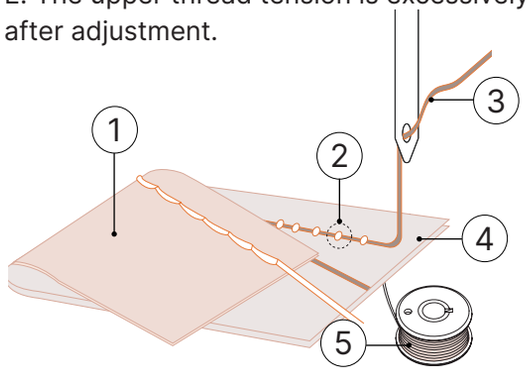

1. Underside of fabric
2. Bobbin thread visible on fabric top side
3. Upper thread
4. Fabric top side
5. Bobbin thread

· Cause

Incorrect bobbin threading

If the bobbin is threaded incorrectly, proper tension will not be applied to the bobbin thread, and it will be pulled out of the fabric when the upper thread is tightened.

As a result, the bobbin thread becomes visible on the top side of the fabric.

· Solution / Check Details

Install the bobbin thread correctly.

A. Press the presser foot lever (raise it), then press "Lock" to lock the machine.

B. Remove the bobbin from the rotary hook.

C. Reinsert the bobbin into the rotary hook so the thread unwinds in the correct direction.

Hold the bobbin in your right hand so the thread unwinds to the left, and hold the thread end with your left hand.

Then place the bobbin into the rotary hook with your right hand.

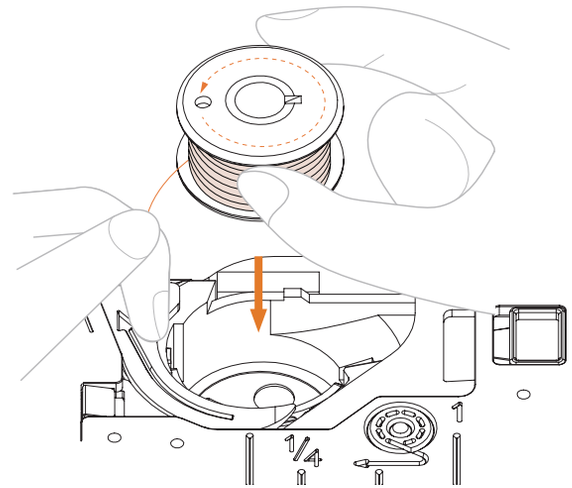

If the thread unwinds in the wrong direction when inserting the bobbin, the sewing tension will be incorrect.

D. Hold the bobbin with your fingers in the correct position, and guide the thread through the slot on the needle plate cover.

· Press the bobbin down with your right hand, then pull the thread around the raised guide with your left hand.

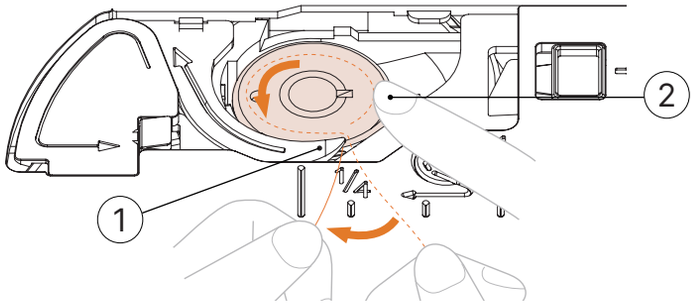

1. Raised guide
2. Press bobbin with right hand

Pull the thread through the slot on the needle plate cover, then cut it with the thread cutter.

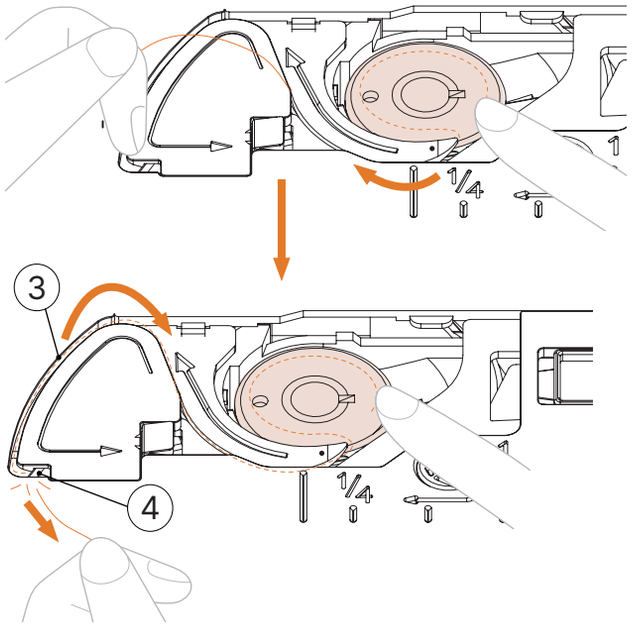

3. Thread slot
4. Thread cutter

After installing the bobbin correctly into the rotary hook, sewing can be performed with proper thread tension.

E. Press "Unlock" to release all keys and buttons.

Bobbin Thread Visible on Fabric Underside

· Symptoms

A. Bobbin thread is visible on the underside of the fabric.

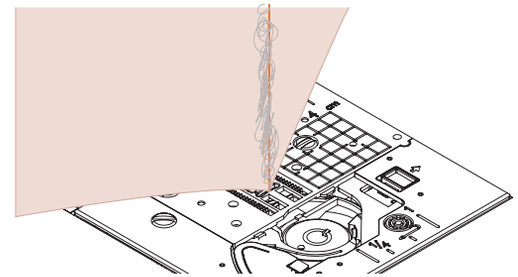

B. After starting sewing, a clicking noise occurs and sewing cannot continue.

C. Checking under the fabric reveals thread tangling in the rotary hook.

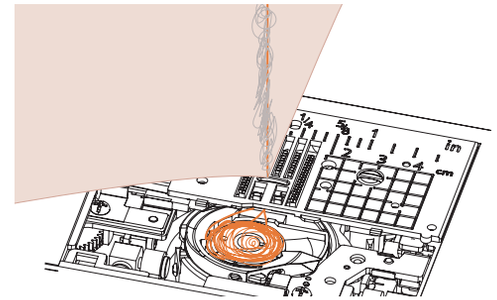

· Cause

Incorrect upper thread threading

If the upper thread is threaded incorrectly, it cannot be pulled up firmly through the fabric, causing it to tangle in the rotary hook and produce a clicking sound.

· Solution / Check Details

Remove tangled thread, then re-thread the upper thread correctly.

A. Remove tangled thread. If it cannot be removed, cut the thread with scissors.

B. Remove the upper thread from the machine.

C. Follow the steps below to re-thread the upper thread. Use the presser foot lever to raise the presser foot.

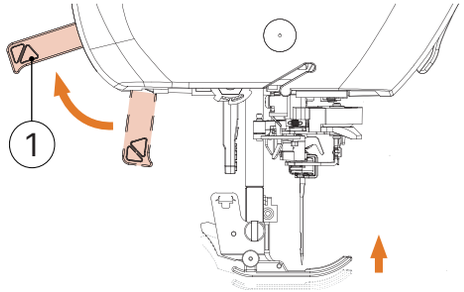

1. Presser foot lever

→ The upper thread guide plate opens, allowing the machine to be threaded.

• If the presser foot is not raised, the machine cannot be threaded correctly.

C. Press the "Needle Position" button once or twice to raise the needle.

E. Hold the thread lightly with your right hand while pulling it with your left, then pass the thread from behind the thread guide cover to the front.

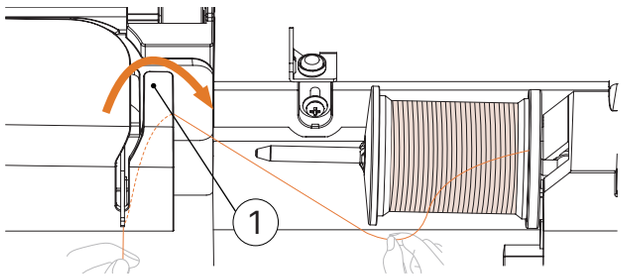

1. Thread guide cover

F. Pass the thread through the thread guide plate, then pull it upward.

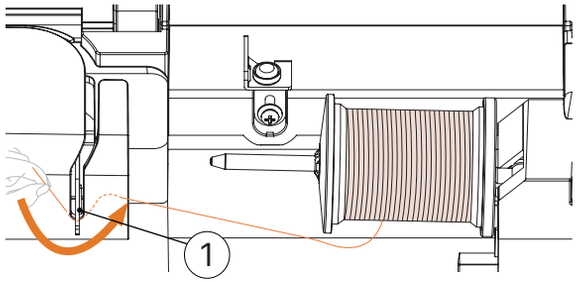

1. Thread guide plate

G. Hold the thread that passed under the thread guide plate with your right hand, and thread it through the threading path in the order shown.

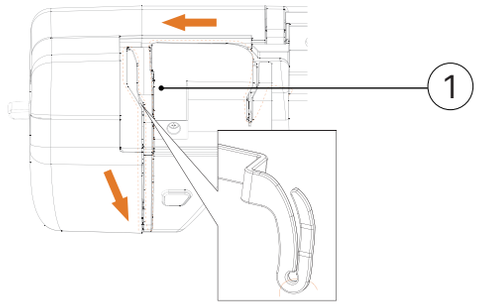

1. Guide plate

H. Press the "Presser Foot" button to lower the presser foot.

I. Pass the thread behind the needle bar thread guide hook.

As shown, hold the thread with your left hand and feed it with your right hand to easily pass it behind the needle bar thread guide.

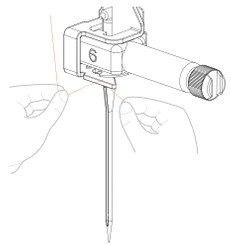

1. Needle bar thread guide hook

J. Next, use the needle threader to thread the needle. Continue following the steps in “Basic Operation” → “Threading.”

Incorrect Thread Tension

· Symptoms

Symptom 1: Bobbin thread is visible on the top side of the fabric.

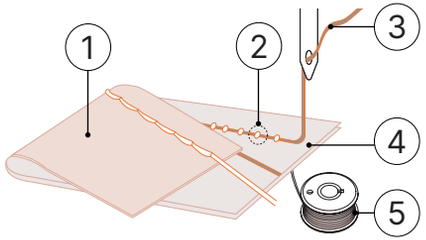

1. Underside of fabric
2. Bobbin thread visible on fabric top side
3. Upper thread
4. Fabric top side
5. Bobbin thread

Symptom 2: The upper thread appears as a straight line on the fabric top side.

Symptom 3: The upper thread is visible on the underside of the fabric. (See figure below)

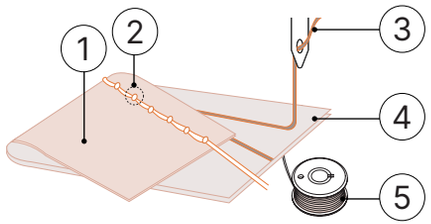

1. Underside of fabric
2. Bobbin thread visible on fabric top side
3. Upper thread
4. Fabric top side
5. Bobbin thread

· Cause / Solution / Check Details

Cause 1: Machine Not Threaded Correctly.

< For Symptoms 1 and 2 >

Incorrect bobbin threading.

Reset the upper thread tension to the standard setting, then refer to “Upper Thread Too Tight” to correct threading.

< For Symptom 3 >

Incorrect upper thread threading.

Reset the upper thread tension to the standard setting, then refer to “Bobbin Thread Visible on Underside” to correct upper threading.

Cause 2: Needle And Thread Not Suitable For The Fabric.

The sewing needle to be used depends on the fabric type and thread thickness.If the correct needle and thread for the fabric are not used, thread tension cannot be adjusted properly, causing puckering or skipped stitches.

Refer to “Basic Operation” → “Fabric / Thread / Needle Combination” to ensure the correct needle and thread are used for the fabric.

Cause 3: Incorrect Upper Thread Tension Setting.

The selected upper thread tension setting is inappropriate.

Refer to “Setting Thread Tension” in “Basic Operation” to select appropriate tension.

Appropriate thread tension varies depending on the fabric and thread type used.

* Test-sew on a scrap of the same fabric to adjust tension.

Tips

· If the upper and bobbin threads are not threaded correctly, thread tension cannot be adjusted properly. First check upper and bobbin threading, then adjust tension.

· If bobbin thread is visible on the top side of the fabric, tap on the manual adjustment screen to reduce upper thread tension.

Sewing mode:

On the home screen, find "Tension Adjustment" and tap .

Embroidery mode:

In the pop-up adjustment panel during embroidery, find "Tension Adjustment" and tap .

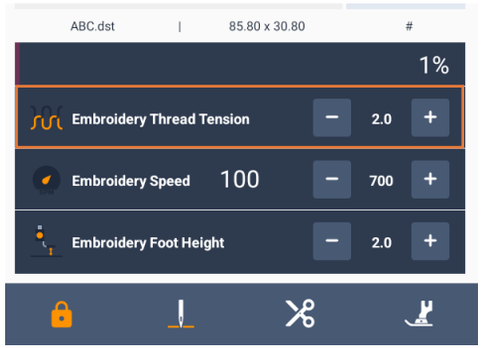

Fabric Caught in Machine and Cannot be Removed

If fabric is caught in the machine and cannot be removed, thread may be tangled under the needle plate. Follow the steps below to remove the fabric. If you cannot complete the procedure, do not force it—contact Ricoma or your distributor.

· Removing Fabric from the Machine

A. Stop the machine immediately.

B. Turn off the machine.

C. Remove the needle.

If the needle is stuck in the fabric, rotate the handwheel toward you (clockwise) to raise the needle out of the fabric, then remove the needle.

·Refer to “Basic Operation” → “Replacing the needle.”

D. Remove the presser foot and presser foot holder.

· Refer to “Basic Operation” → “Replacing the presser foot” and “Removing and installing the presser foot holder.”

E. Lift the fabric and cut the threads underneath.

If the fabric can be removed, take it out. Then continue with the steps below to clean the rotary hook.

F. Remove the needle plate cover.

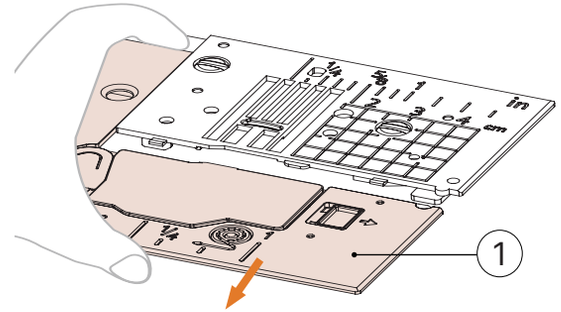

1. Needle plate cover

·Refer to “Troubleshooting” → “Cleaning the rotary hook.”

G. Cut the threads, then remove the bobbin.

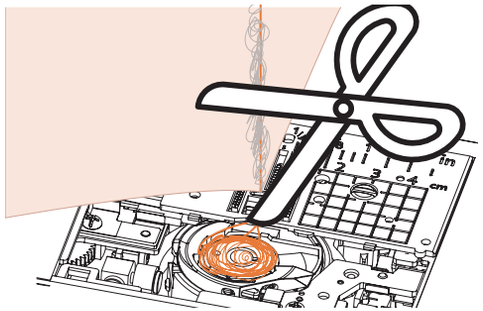

H. Remove the rotary hook.

If thread remains inside the rotary hook, remove it.

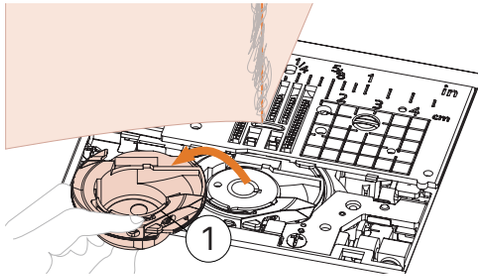

1. Rotary hook

I. Use a cleaning brush or vacuum cleaner to remove any lint or dust from the rotary hook and surrounding area.

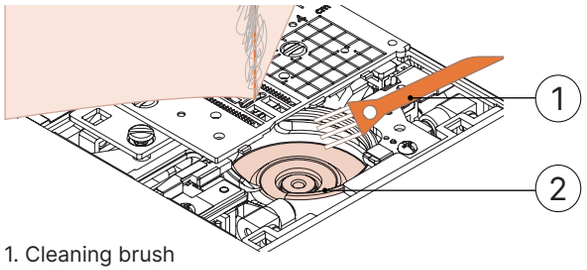

1. Cleaning brush
2. Rotary hook

If The Fabric Can Be Removed	Continue To Step P
If The Fabric Cannot Be Removed	Continue To Step J

J. Use the supplied coin screwdriver to loosen the two screws on the needle plate.

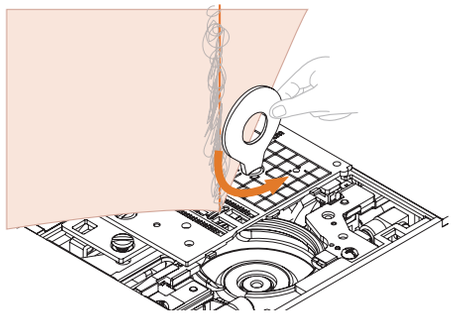

Tips

· Be careful not to drop the screws removed from the machine.

K. Gently lift the needle plate, cut any threads, then remove the needle plate.

Remove the fabric and threads from the needle plate.

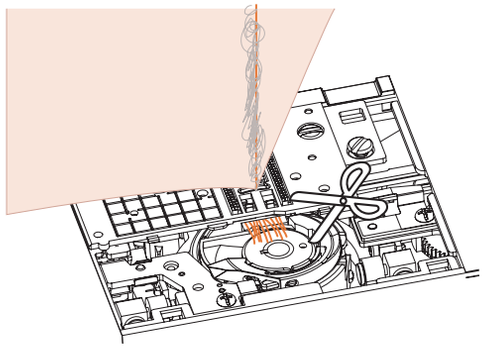

If the fabric still cannot be removed after completing these steps, contact Ricoma or your distributor.

L. Remove all thread fragments around the rotary hook and feed dogs.

M. Rotate the handwheel to raise the feed dogs.

N. Align the two screw holes on the needle plate with the two holes on the needle plate base, then install the needle plate onto the machine.

O. Lightly tighten the left needle plate screw with your fingers. Then use the L-shaped (or coin) screwdriver to firmly tighten the left screw. Finally, firmly tighten the right screw.

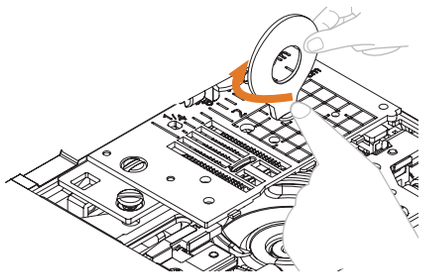

Rotate the handwheel to confirm the feed dogs move smoothly and do not contact the edge of the needle plate slot.

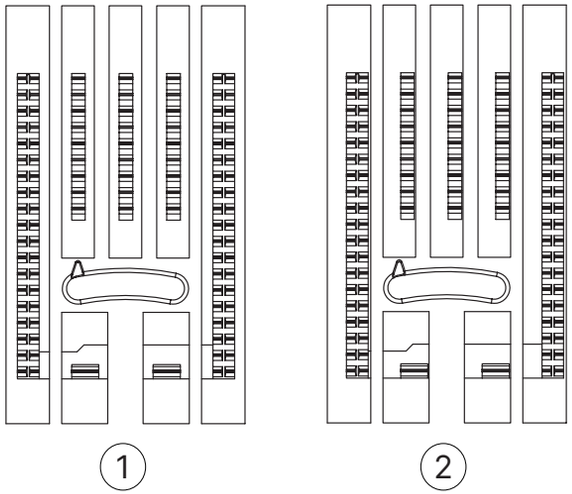

1. Correct feed dog position
2. Incorrect feed dog position

Tips

· Be careful not to drop the screws removed from the machine.

P. Insert the rotary hook so that the ▲ mark on the hook aligns with the ● mark on the machine.

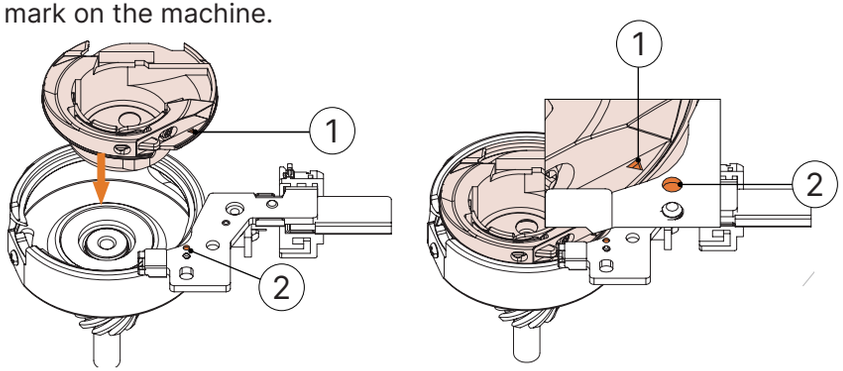

·Align the ▲ and ● marks.

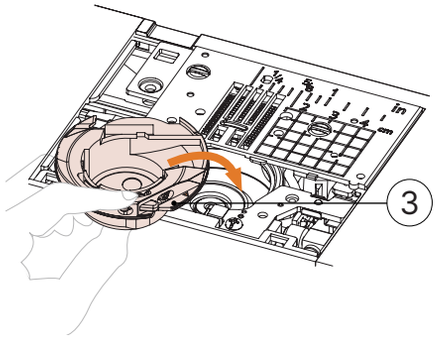

1. ▲ Mark
2. ● Mark
3. Rotary hook

· Be sure to align the indicated marks before installing the rotary hook.

Caution

· Do not use a scratched rotary hook; otherwise it may cause upper thread tangling, needle breakage, or affect sewing performance.

· Ensure the rotary hook is installed correctly, otherwise the needle may break.

Q. Install the needle plate cover according to step J in “Cleaning the Rotary Hook.”

R. Check the condition of the needle, then install the needle.

If the needle is in poor condition, such as bent, be sure to install a new needle.

· Refer to “Basic Operation” → “Checking the needle condition” and “Replacing the needle.”

Caution

· Do not use a bent needle. A bent needle can easily break and may cause injury.

Tips

· After completing this step, continue with the steps in “Checking Machine Operation” below to confirm the machine runs normally.

· Since fabric jams may damage the needle, we recommend replacing it with a new one.

· Checking Machine Operation

If the needle plate was removed, check machine operation to confirm correct installation.

A. Turn on the machine.

B. Select stitch 1-03.

Tips

· The presser foot and thread are not yet installed.

C. Slowly rotate the handwheel toward you (counterclockwise) and check from the right side that the needle drops into the center of the needle plate opening.

If the needle contacts the needle plate, remove the needle plate and reinstall it, starting from step M in “Removing Fabric from the Machine.”

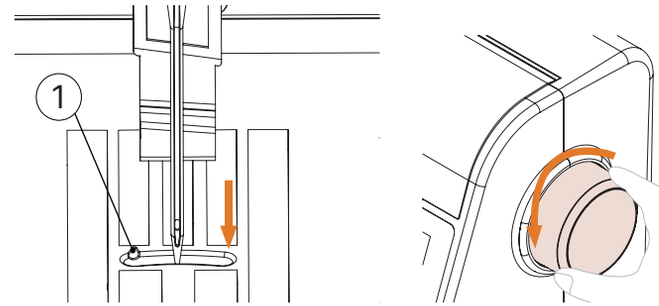

1.Needle plate opening

2. Handwheel

D. Select a stitch ⧚. At this time, set the stitch length and width to the maximum.

For details on changing settings, refer to “Basic Operation” → “Setting Stitch Width” and “Setting Stitch Length.”

E. Slowly rotate the handwheel toward you (counterclockwise) to check whether the needle bar and feed dogs operate normally.

If the needle or feed dogs contact the needle plate, the machine may malfunction; therefore contact Ricoma or your distributor.

F. Turn off the machine, then install the bobbin and presser foot.

Refer to “Basic Operation” → “Installing the bobbin” and “Replacing the presser foot.”

G. Thread the machine correctly.

For details on threading the machine, refer to “Basic Operation” → “Upper Thread Threading.”

Tips

· Incorrect upper threading may cause thread tangling. Please ensure the machine is threaded correctly.

H. Perform a test stitch on a piece of cotton fabric.

Tips

· Incorrect upper threading or sewing very thin fabric may cause poor stitching. If test results are unsatisfactory, check the upper threading or the type of fabric used.

Thread Tangling Under Bobbin Winder Base

If bobbin winding is started before the thread is correctly passed under the pretension disk of the bobbin winder guide slot, thread tangling may occur under the bobbin winder base.

In this case, loosen and remove the tangled thread according to the steps below.

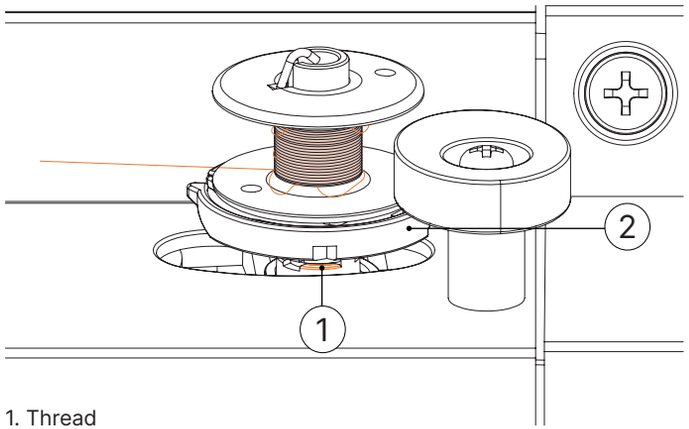

1. Thread
2. Bobbin winder base

Caution

· Even if thread tangles under the bobbin winder base, do not remove the bobbin winder base, otherwise injury may occur.

· Do not remove the screw on the bobbin winder guide shaft, otherwise the machine may be damaged; removing the screw will not release the tangled thread.

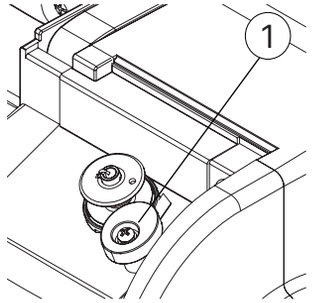

1. Screw on the bobbin winder guide shaft

A. If thread tangles under the bobbin winder base, press the "Start/Stop" button to stop bobbin winding.

If the foot controller is connected, remove your foot from the pedal.

B. Use scissors to cut the thread around the bobbin winder guide slot.

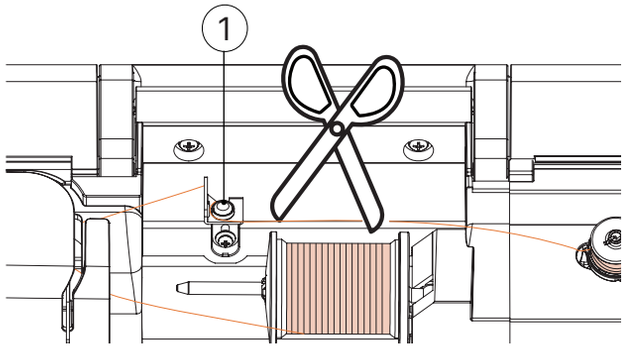

1. Bobbin winder guide slot

C. Slide the bobbin winder shaft to the left, then remove the bobbin from the shaft. Cut the thread extending from the bobbin to completely remove the bobbin from the shaft.

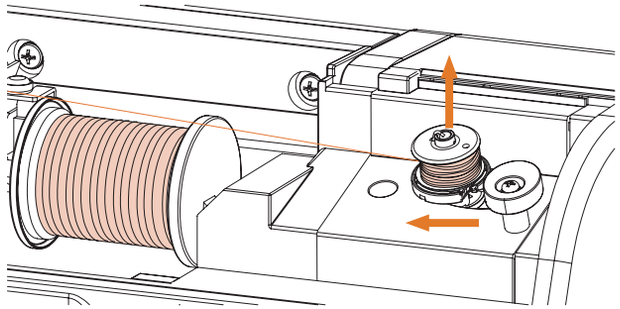

D. Hold the thread end with your left hand and loosen the thread clockwise with your right hand, as shown.

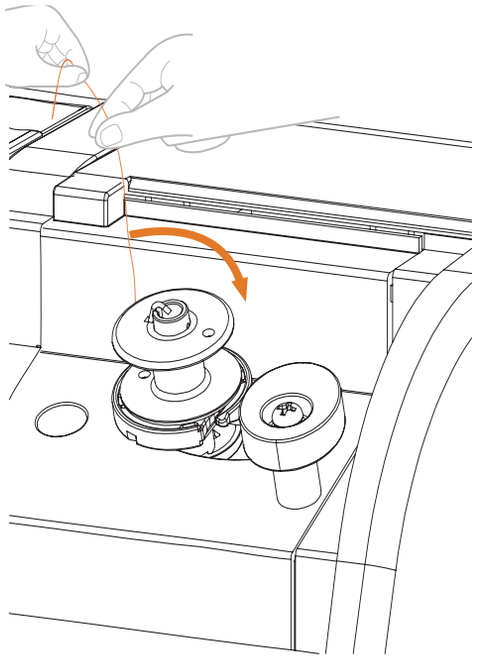

E. Rewind the bobbin.

Tips

· Make sure the thread passes correctly under the pretension disk of the bobbin winder guide slot.

Symptom List

· Preparation

Symptom	Possible Cause	Solution	Reference
Cannot Thread Needle	Needle Not In Correct Position	Press The “Needle Position” Button To Raise The Needle	——
	Needle Installed Incorrectly	Reinstall The Needle Correctly	Page 45
	Needle Stuck, Bent, Or Blunt Tip	Replace The Needle	Page 48
	Upper Thread Threaded Incorrectly	Check The Threading Procedure And Re-Thread The Machine	Page 36
	Threader Hook Bent And Cannot Pass Through Needle Eye	Contact Ricoma Or Your Distributor	——
	Threader Lever Cannot Move Or Return To Initial Position	Contact Ricoma Or Your Distributor	——
Cannot Thread Needle	Using Size 65/9 Needle	This Needle Is Not Compatible With The Threader. Thread The Needle Manually	Page 41
Cannot Lower Presser Foot With Presser Foot Lever	Presser Foot Raised Using The “Presser Foot Lift” Button	Press The “Presser Foot Lift” Button To Lower The Presser Foot	Page 14
Bobbin Thread Not Wound Evenly On Bobbin	Thread Not Correctly Passed Through Bobbin Winder Guide Slot	Pass The Thread Correctly Through The Bobbin Winder Guide Slot	Page 34
	Bobbin Rotates Slowly	Move The Sewing Speed Controller To The Right (Increase Speed)	Page 34
	Thread Tail Not Properly Wound Onto Bobbin	Wind The Thread Tail Clockwise Around The Bobbin 5–6 Times	Page 30
	Empty Bobbin Not Correctly Installed On Shaft	Install The Empty Bobbin Correctly On The Shaft And Rotate Slowly Until It Clicks Into Place	Page 30
During Bobbin Winding, Thread Winds Under The Bobbin Winder Base	Bobbin Not Wound Correctly Thread Not Inserted Into Guide Slot When Starting Bobbin Winding	Remove Thread From Under The Bobbin Winder Base And Rewind Bobbin Correctly When Winding The Bobbin, Follow The Diagram On Top Of The Machine	Page 173

Symptom	Possible Cause	Solution	Reference
Bobbin Thread Cannot Be Pulled Up	Needle Stuck, Bent, Or Blunt	Replace The Needle	Page 48
	Bobbin Installed Incorrectly	Reinstall The Bobbin Correctly	Page 34
No Display On Lcd	Main Power Switch Not Turned On	Turn On The Main Power	Page 19
	Power Cord Plug Not Inserted Into Outlet	Insert The Power Cord Plug Into The Outlet	Page 19
Lcd Screen Fogging	Condensation On Lcd Screen	This Condition Will Disappear After A While	——
Operation Keys Do Not Respond	Damaged Glove While Pressing Keys	Touch The Operation Keys Directly With Your Finger	——
	Pressing Keys With Fingernail		
	Using A Non-Capacitive Stylus		
Sewing Light Does Not Turn On	Sewing Light Is Defective	Contact Ricoma Or Your Distributor	——
	Light Setting In Screen Set To “Off”	Change The Setting To “On”	——
Embroidery Unit Does Not Operate	Embroidery Frame Installed Before Unit Initialization	Reinstall The Embroidery Unit Correctly	Page 84
	Thread Tail Not Properly Wound Onto Bobbin	Remove The Embroidery Frame, Then Perform The Initialization Procedure Correctly	Page 93

· During Sewing

Symptom	Possible Cause	Solution	Reference
Machine Does Not Operate	Start / Stop Button Not Pressed	Press The "Start / Stop" Button	——
	Bobbin Winder Shaft Pushed To The Right	Move The Bobbin Winder Shaft To The Left	Page 33
	No Pattern Selected	Select A Pattern	Page 141
	Presser Foot Not Lowered	Lower The Presser Foot	——
	Start/Stop Button Pressed While Foot Controller Connected	Disconnect The Foot Controller Or Operate The Machine With The Foot Controller	Page 55
Needle Breaks	Needle Installed Incorrectly	Reinstall The Needle Correctly	Page 45
	Needle Clamp Screw Not Tightened	Tighten The Needle Clamp Screw	Page 48
	Needle Stuck Or Bent	Replace The Needle	Page 45
	Incorrect Needle Or Thread For The Fabric	Refer To The “Fabric/Thread/Needle Combination” Chart	Page 46
	Incorrect Presser Foot Used	Use The Recommended Presser Foot	Page 49
	Upper Thread Tension Too Tight	Adjust Thread Tension	Page 160
	Fabric Pulled During Sewing	Do Not Pull The Fabric During Sewing	——
	Spool Cap Installed Incorrectly	Check The Spool Cap Installation Method And Reinstall It	Page 37
	Scratches Around Needle Plate Opening	Replace The Needle Plate Or Contact Ricoma / Distributor	——
	Scratches Around Presser Foot Opening	Replace The Presser Foot Or Contact Ricoma / Distributor	Page 49

Symptom	Possible Cause	Solution	Reference
Needle Breaks	Rotary Hook Scratched	Replace The Rotary Hook Or Contact Ricoma/Distributor	——
	Defective Needle	Replace The Needle	Page 45
	Bobbin Not Designed For This Machine	An Incorrect Bobbin Will Not Operate Properly. Use Only Bobbins Designed For This Machine	Page 30
	Upper Thread Threaded Incorrectly	Check The Threading Procedure And Re-Thread The Machine	Page 36
	Bobbin Installed Incorrectly	Reinstall The Bobbin Correctly	Page 34
	Presser Foot Not Installed Correctly	Install The Presser Foot Correctly	Page 49
	Presser Foot Holder Screw Loose	Tighten The Presser Foot Holder Screw Securely	Page 51
	Fabric Too Thick	Use Fabric That The Needle Can Penetrate When Turning The Handwheel	——
	Forcing Fabric When Sewing Thick Material Or Seams	Do Not Force The Fabric When Feeding	Page 101
	Needle Too Short (Stitch Length Too Short)	Adjust Stitch Length	Page 60
	Stabilizer Not Applied To Embroidery Fabric	Apply Stabilizer	Page 88
	Bobbin Wound Incorrectly	Use A Correctly Wound Bobbin	Page 30
Upper Thread Breaks	Machine Threaded Incorrectly (Wrong Spool Cap, Loose Spool Cap, Thread Not On Needle Bar Guide, Etc.)	Thread The Machine Correctly	Page 36
	Thread Knotted Or Tangled	Remove Any Knots Or Tangles	——
	Selected Needle Not Matched With Thread	Select A Needle Appropriate For The Thread Type	Page 46
	Upper Thread Tension Too Tight	Adjust Thread Tension	Page 61

Symptom	Possible Cause	Solution	Reference
Upper Thread Breaks	Thread Tangled	Cut Tangled Thread With Scissors And Remove From Rotary Hook, Etc.	Page 177
	Needle Stuck, Bent, Or Blunt	Replace Needle	Page 45
	Needle Installed Incorrectly	Reinstall Needle Correctly	Page 48
	Scratches Around Needle Plate Opening	Replace Needle Plate Or Contact Ricoma/Distributor	——
	Scratches Around Presser Foot Opening	Replace Presser Foot Or Contact Ricoma/Distributor	Page 49
	Rotary Hook Scratched	Replace Rotary Hook Or Contact Ricoma/Distributor	——
	Incorrect Needle Or Thread For Selected Fabric	Refer To “Fabric/Thread/Needle Combination” Chart	Page 46
	Thread Knotted Or Tangled During Sewing	Re-Thread Upper And Bobbin Threads	Pages 35–36
	Bobbin Not Designed For This Machine	Incorrect Bobbin Will Not Operate Properly. Use Only Bobbins Designed For This Machine	Page 30
Bobbin Thread Visible On Fabric Underside	Upper Thread Threaded Incorrectly	Check Threading Procedure And Re-Thread Machine. Ensure Presser Foot Is Raised During Threading So Upper Tension Is Set Correctly	Page 36
	Incorrect Needle Or Thread For Selected Fabric	Refer To “Fabric / Thread/Needle Combination” Chart	Page 46
Upper Thread Too Tight	Bobbin Wound Incorrectly	Install Bobbin Correctly	Page 34
Bobbin Thread Breaks	Bobbin Installed Incorrectly	Reinstall Bobbin Correctly	Page 30
	Bobbin Wound Incorrectly	Use Correctly Wound Bobbin	Page 30
	Bobbin Scratched Or Cannot Rotate Properly	Replace Bobbin	Page 30
	Thread Tangled	Cut Tangled Thread And Remove From Rotary Hook And Related Parts	Page 177

Symptom	Possible Cause	Solution	Reference
Bobbin Thread Breaks	Bobbin Not Designed For This Machine	Incorrect Bobbin Will Not Operate Properly. Use Only Bobbins Designed For This Machine	Page 30
Fabric Puckering	Upper Or Bobbin Threading Incorrect	Check Threading Procedure And Thread Correctly	Page 36
	Spool Cap Installed Incorrectly	Check Spool Cap Installation Method And Reinstall	Page 37
	Incorrect Needle Or Thread For Selected Fabric	Refer To “Fabric / Thread/Needle Combination” Chart	Page 46
	Needle Stuck, Bent, Or Blunt	Replace Needle	Page 48
	Stitch Length Too Long For Thin Fabric	Reduce Stitch Length	Page 60
	Thread Tension Set Incorrectly	Adjust Thread Tension	Page 61
	Incorrect Presser Foot	Use Correct Presser Foot	Page 49
Stitches Not Formed Correctly	Selected Presser Foot Does Not Match Stitch	Install Presser Foot Matching The Stitch	Page 49
	Incorrect Thread Tension	Adjust Upper Thread Tension	Page 61
	Thread Tangled In Rotary Hook	Remove Tangled Thread. If Tangled In Rotary Hook, Clean Hook	Page 177
	Feed Dogs Set To Lowered Position	Slide Feed Dog Position Switch To The Right	——
Skipped Stitches	Machine Threaded Incorrectly	Check Threading Procedure And Thread Correctly	Page 36
	Incorrect Needle Or Thread For Selected Fabric	Refer To “Fabric/Thread/Needle Combination” Chart	Page 46
	Needle Stuck, Bent, Or Blunt	Replace Needle	Page 45
	Needle Installed Incorrectly	Reinstall Needle Correctly	Page 45

Symptom	Possible Cause	Solution	Reference
Skipped Stitches	Defective Needle	Replace Needle	Page 45
	Dust Or Lint Under Needle Plate Cover	Clean Dust Or Lint With A Brush	Page 170
	Fabric Is Thin Or Stretch Material	Place A Sheet Of Thin Paper Under The Fabric While Sewing	Page 102
No Stitches Formed	Needle Stuck, Bent, Or Blunt	Replace Needle	Page 45
	Bobbin Installed Incorrectly	Reinstall Bobbin Correctly	Page 34
	Upper Thread Threaded Incorrectly	Check Threading Procedure And Re-Thread Machine	Page 36
Sharp Noise During Sewing	Dust Or Lint Accumulated In Feed Dogs	Clean Dust Or Lint	Page 170
	Thread Jammed In Rotary Hook	Clean Rotary Hook	Page 170
	Upper Thread Threaded Incorrectly	Check Threading Procedure And Re-Thread Machine	Page 36
	Bobbin Not Designed For This Machine	Incorrect Bobbin Will Not Operate Properly. Use Only Bobbins Designed For This Machine	Page 30
	Needle Hole Or Wear Scratches In Rotary Hook	Replace Rotary Hook Or Contact Ricoma/Distributor	——
Fabric Not Feeding	Feed Dogs Set To Lowered Position	Slide Feed Dog Position Switch To The Right	——
	Stitch Density Too High	Increase Stitch Length Setting	Page 60
	Incorrect Presser Foot	Use Correct Presser Foot	Page 49
	Needle Stuck, Bent, Or Blunt	Replace Needle	Page 48
	Thread Tangled	Cut Tangled Thread And Remove From Rotary Hook	Page 177

Symptom	Possible Cause	Solution	Reference
Fabric Not Feeding Into Machine	Curved Presser Foot “J” Tilted On Thick Seam At Stitch Start	Use The Presser Foot Leveling Button (Black Button On Left Side Of Presser Foot “J”) To Keep The Foot Level While Sewing	Page 101
	Presser Foot Pressure For Fabric Set Incorrectly	Adjust Presser Foot Pressure In Settings Screen	Page 63
Fabric Feeds In Reverse	Feed Mechanism Damaged	Contact Ricoma/Distributor	——
Needle Hits Needle Plate	Needle Clamp Screw Loose	Tighten Needle Clamp Screw Securely. Replace Needle If Bent Or Dull	Page 48
	Needle Stuck, Bent, Or Blunt	Replace Needle	Page 48
Unable To Remove Fabric From Machine	Thread Tangled Under Needle Plate	Lift Fabric, Cut Threads Underneath, Then Clean Rotary Hook	Page 177
Broken Needle Dropped Into Machine	——	1. Turn Off Machine And Remove Needle Plate 2. If Visible, Remove Broken Needle With Tweezers 3. After Removal, Reinstall Needle Plate And Insert New Needle 4.Before Powering On, Slowly Turn Handwheel Toward You And Confirm Smooth Rotation And Needle Entering Center Of Needle Plate Hole 5. If Rotation Is Not Smooth Or Needle Cannot Be Removed, Contact Ricoma/Distributor	——
Handwheel Jams During Rotation	Thread Tangled In Rotary Hook	Remove Tangled Thread From Rotary Hook. Reinstall Hook Correctly	Page 170

· After sewing

Symptom	Possible Cause	Solution	Reference
Incorrect Thread Tension	Upper Thread Threaded Incorrectly	Check Threading Procedure And Re-Thread Machine	Page 36
	Bobbin Installed Incorrectly	Reset Bobbin (If Needle Plate Was Removed, Reinstall And Tighten It Before Installing Rotary Hook. Confirm Needle Enters Center Of Needle Plate Hole)	Page 34
	Incorrect Needle Or Thread For Selected Fabric	Refer To “Fabric/Thread/Needle Combination” Chart	Page 46
	Presser Foot Holder Not Installed Correctly	Reinstall Presser Foot Holder Correctly	Page 49
	Thread Tension Set Incorrectly	Adjust Thread Tension	Page 61
	Bobbin Wound Incorrectly	Use Correctly Wound Bobbin	Page 30
	Needle Stuck, Bent, Or Blunt	Replace Needle	Page 45
	Bobbin Not Designed For This Machine	Incorrect Bobbin Will Not Operate Properly. Use Only Bobbins Designed For This Machine	Page 30
Pattern Not Visible	Incorrect Presser Foot	Install Correct Presser Foot	Page 49
	No Stabilizer Used On Thin Or Shrinkable Fabric	Apply Stabilizer	Page 102
	Thread Tension Set Incorrectly	Adjust Thread Tension	Page 61
	Fabric Pulled Or Fed At An Angle During Sewing	Guide Fabric By Hand And Feed Straight During Sewing	——
	Thread Tangled In Rotary Hook	Remove Tangled Thread. If Tangled In Rotary Hook, Clean Hook	Page 177

Chapter 3 Specifications

Sewing Machine

Machine Dimensions	Approx. 515 × 300 × 220 mm 20.28 × 11.81 × 28.66 in	Sewing Speed	70–850 Stitches / min
Machine Weight	Approx. 9.8 Kg / 21.61 Lbs	Needle	Household Sewing Machine Needle (Ha × 130)

Embroidery Unit

Embroidery Unit Dimensions	Approx. 450 × 132 × 420 mm 17.72 × 5.20 ×16.54 in	Embroidery Unit Weight	Approx. 3.8 kg / 8.38 lbs
Machine Dimensions With Embroidery Unit Installed	Approx. 700 × 300 × 420 mm 27.56 × 11.81 ×16.54 ni	–	-

*Specifications are subject to change without notice

Upgrade Machine Software Using a USB Flash Drive

You can use a USB flash drive to upgrade the software of your sewing machine.

A. Insert the USB flash drive into the machine's USB port. Place the downloaded upgrade package in the root directory of the USB drive.

B. On the home screen, tap in the upper-right corner to enter the Control Center.

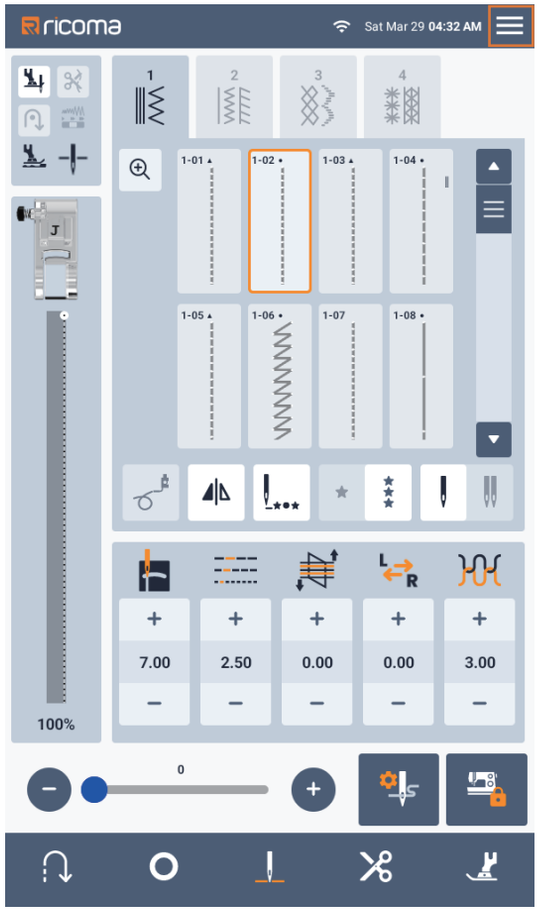

C. Then tap to enter the Settings page.

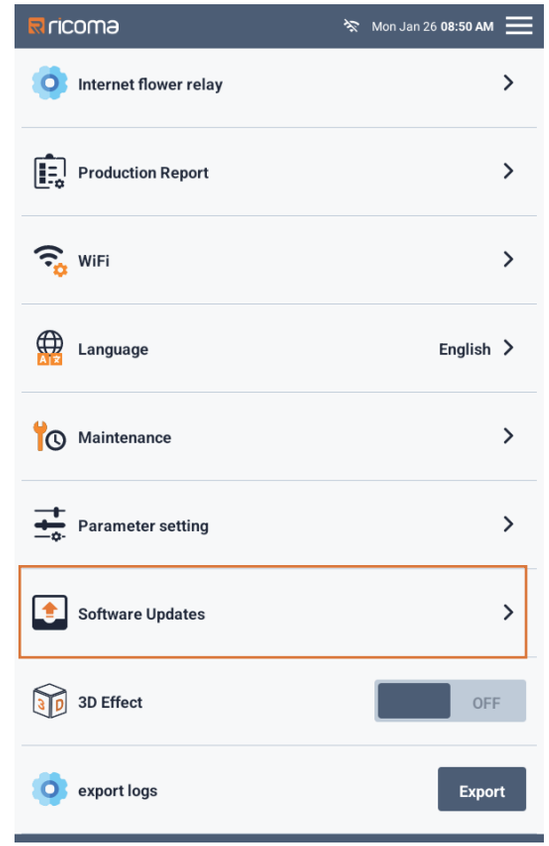
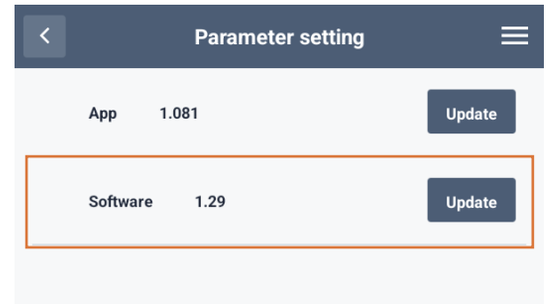
D. Tap "Update" and wait for the update to complete. Remove the USB flash drive, turn off the machine power, wait 20 seconds, then turn the power back on.